Aston Dual Hydronic Unit

GEOTHERMAL HEAT PUMPS

8 TO 15 TONS

Submittal Data
English Language
IP/Metric Units
SD1007WG 08/11

GEOSTAR

Contractor: _____ P.O.: _____

Engineer: _____

Project Name: _____ Unit Tag: _____

Aston Dual Hydronic Unit
8 - 15 Tons 60Hz

Model Nomenclature

1-3	4-6	7	8	9	10	11	12-13	14
GTW	120	R	1	8	N	B	SS	A

Model
GTW = G Series Hydronic Heat Pump

Capacity
100 MBTUH
120 MBTUH
150 MBTUH
180 MBTUH

Operation
R = Reversible

Voltage
1 = 208-230/60/1 (Residential) [1]
0 = 208-230/60/1 (Commercial)
3 = 208-230/60/3
4 = 460/60/3
5 = 575/60/3
8 = 380/60/3

Vintage
A = Residential Voltage Code
B = Commercial Voltage Code

Non-Standard Options
SS = Standard Option

Water Connections
B = Back mounted connections
T = Top mounted connections

GeoStart Option
N = None
A = GeoStart [2]

Controls
8 = FX10 without communication, with User Interface

NOTES: [1] Vintage code "A"
[2] GeoStart available only on 208-230/60/1 units

G Series hydronic units are Safety listed under UL1995 thru ETL and performance tested in accordance with standard AHRI/ISO 13256-2.

The manufacturer works continually to improve its products. As a result, the design and specifications of each product at the time of order may be changed without notice. Purchaser's approval of this data set signifies that the equipment is acceptable under the provisions of the job specification. Statements and other information contained herein are not express warranties and do not form the basis of any bargain between the parties, but are merely the manufacturer's opinion or commendation of its products.

Contractor: _____ P.O.: _____

Engineer: _____

Project Name: _____ Unit Tag: _____

Aston Dual Hydronic Unit
8 - 15 Tons 60Hz

GEOSTAR

AHRI Data

AHRI/ASHRAE/ISO 13256-2
English (IP) Units

Model	Capacity Modulation	Flow Rate		Water Loop Heat Pump				Ground Water Heat Pump				Ground Loop Heat Pump			
				Cooling EST 86°F ELT 53.6°F		Heating EST 68°F ELT 104°F		Cooling EST 59°F ELT 53.6°F		Heating EST 50°F ELT 104°F		Cooling Full EST 77°F Part EST 68°F ELT 53.6°F		Heating Full EST 32°F Part ELT 41°F ELT 104°F	
		Sgpm	Lgpm	Capacity Btuh	EER Btuh/W	Capacity Btuh	COP	Capacity Btuh	EER Btuh/W	Capacity Btuh	COP	Capacity Btuh	EER Btuh/W	Capacity Btuh	COP
100	Full	23	23	93,000	14.6	125,000	4.0	105,000	22.0	103,000	3.3	100,000	16.8	82,000	3.0
	Part	23	23	50,000	15.8	65,000	4.6	56,000	24.5	53,000	3.7	54,000	22.0	47,000	3.4
120	Full	28	28	103,000	14.0	142,000	4.0	123,000	21.6	118,000	3.3	114,000	16.2	93,000	3.0
	Part	28	28	58,000	15.5	76,000	4.4	65,000	22.4	62,500	3.7	63,000	21.1	55,000	3.4
150	Full	32	32	129,000	13.5	199,000	4.0	153,000	21.1	148,000	3.2	147,000	16.0	123,000	2.8
	Part	32	32	72,000	15.3	101,000	4.3	75,000	22.0	73,000	3.7	78,000	20.7	70,000	3.3
180	Full	36	36	150,000	13.3	221,000	3.9	175,000	19.8	173,000	3.1	165,000	15.8	139,000	2.7
	Part	36	36	78,000	15.0	113,000	4.2	89,000	20.9	87,000	3.7	86,000	18.4	82,000	3.5

All ratings based upon 208V operation.

3/21/11

Energy Star Compliance Table

Model	Tier 1		Tier 2		Tier 3	
	Ground Water	Ground Loop	Ground Water	Ground Loop	Ground Water	Ground Loop
100	Yes	Yes	Yes	Yes	Yes	Yes
120	Yes	Yes	Yes	Yes	Yes	Yes
150	No	No	No	No	No	No
180	No	No	No	No	No	No

12/17/10

Energy Star Rating Criteria
In order for water-source heat pumps to be Energy Star rated they must meet or exceed the minimum efficiency requirements listed below. Please note there are 3 Tier levels that dictate minimum efficiency for water source heat pumps. Only one tier level is active at a given moment.

Tier 1: 12/1/2009 – 12/31/2010

	EER	COP
Closed loop water-to-air	14.1	3.3
Open loop water-to-air	16.2	3.6
Closed loop water-to-water	15.1	3.0
Open loop water-to-water	19.1	3.4

Tier 2: 1/1/2011 – 12/31/2011

	EER	COP
Closed loop water-to-air	16.1	3.5
Open loop water-to-air	18.2	3.8
Closed loop water-to-water	15.1	3.0
Open loop water-to-water	19.1	3.4

Tier 3: 1/1/2012 – No Effective End Date Published

	EER	COP
Closed loop water-to-air	17.1	3.6
Open loop water-to-air	21.1	4.1
Closed loop water-to-water	16.1	3.1
Open loop water-to-water	20.1	3.5

The manufacturer works continually to improve its products. As a result, the design and specifications of each product at the time of order may be changed without notice. Purchaser's approval of this data set signifies that the equipment is acceptable under the provisions of the job specification. Statements and other information contained herein are not express warranties and do not form the basis of any bargain between the parties, but are merely the manufacturer's opinion or commendation of its products.

AHRI Data cont.

The performance standard AHRI/ASHRAE/ISO 13256-2 became effective January 1, 2000. This new standard has three major categories: Water Loop, Ground Water, and Ground Loop.

Unit of Measure: The Cooling COP

The cooling efficiency is measured in EER (US version measured in Btuh per Watt. The Metric version is measured in a cooling COP (Watt per Watt) similar to the traditional COP measurement.

Pump Power Correction Calculation

Within each model, only one water flow rate is specified for all three groups and pumping Watts are calculated using the following formula. This additional power is added onto the existing power consumption.

• Pump power correction = (gpm x 0.0631) x (Press Drop x 2990) / 300

Where 'gpm' is waterflow in gpm and 'Press Drop' is the pressure drop through the unit heat exchanger at rated water flow in feet of head.

ISO Capacity and Efficiency Calculations

The following equations illustrate cooling calculations:

• ISO Cooling Capacity = Cooling Capacity (Btuh) x 3.412

• ISO EER Efficiency (W/W) = ISO Cooling Capacity (Btuh) x 3.412 / [Power Input (Watts) + Pump Power Correction (Watt)]

The following equations illustrate heating calculations:

• ISO Heating Capacity = Heating Capacity (Btuh) x 3.412

• ISO COP Efficiency (W/W) = ISO Heating Capacity (Btuh) x 3.412 / [Power Input (Watts) + Pump Power Correction (Watt)]

Test Conditions

	ISO/AHRI 13256-2 WLHP	ISO/AHRI 13256-2 GWHP	ISO/AHRI 13256-2 GLHP
Cooling			
Liquid Entering Indoor Side - °F	53.6	53.6	53.6
Standard Rating Test			
Liquid Entering Heat Exchanger - °F	86	59	77
Part-load Rating Test			
Liquid Entering Heat Exchanger	86	59	68
Fluid Flow Rate	*	*	*
Heating			
Liquid Entering Indoor Side - °F	104	104	104
Standard Rating Test			
Liquid Entering Outdoor-side Heat Exchanger - °F	68	50	32
Part-load Rating Test			
Liquid Entering Outdoor-side Heat Exchanger	68	50	41
Fluid Flow Rate	*	*	*

NOTES: *Flow rate is specified by the manufacturer
WLHP = Water Loop Heat Pump; GWHP = Ground Water Heat Pump;
GLHP = Ground Loop Heat Pump

Conversions

Water Flow (lps) = GPM x 0.0631

Press Drop (Pascals) = Press Drop (ft hd) x 2990

The manufacturer works continually to improve its products. As a result, the design and specifications of each product at the time of order may be changed without notice. Purchaser's approval of this data set signifies that the equipment is acceptable under the provisions of the job specification. Statements and other information contained herein are not express warranties and do not form the basis of any bargain between the parties, but are merely the manufacturer's opinion or commendation of its products.

Contractor: _____ P.O.: _____

Engineer: _____

Project Name: _____ Unit Tag: _____

Aston Dual Hydronic Unit
8 - 15 Tons 60Hz

Dimensional Data

GTW100-180 - Top Waterline Configuration

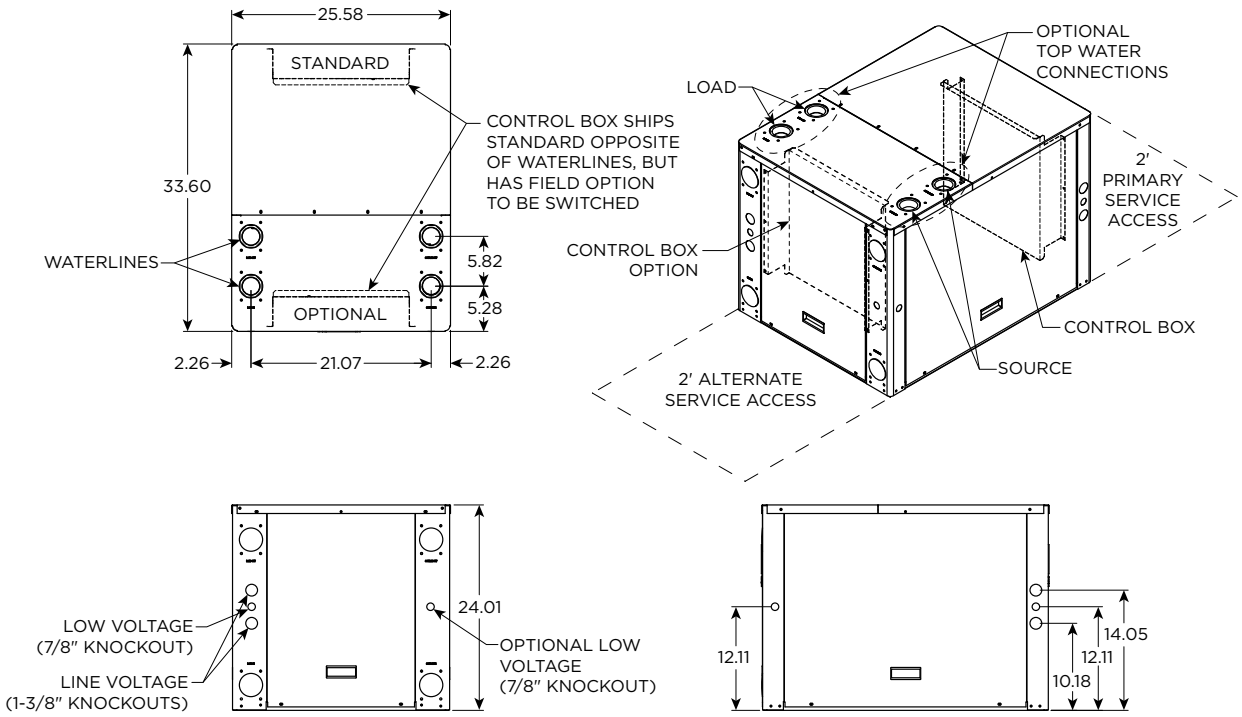

GTW100-180 - Back Waterline Configuration

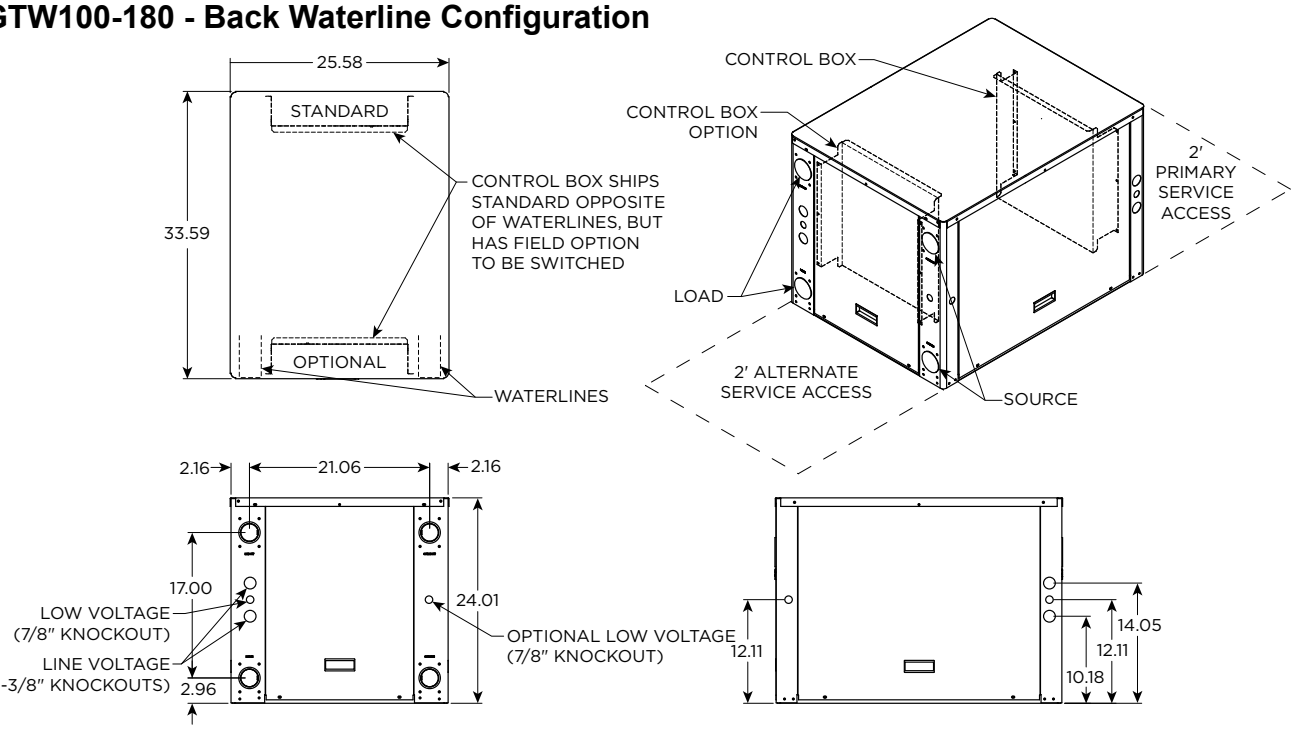

The manufacturer works continually to improve its products. As a result, the design and specifications of each product at the time of order may be changed without notice. Purchaser's approval of this data set signifies that the equipment is acceptable under the provisions of the job specification. Statements and other information contained herein are not express warranties and do not form the basis of any bargain between the parties, but are merely the manufacturer's opinion or commendation of its products.

Contractor: _____ P.O.: _____

Engineer: _____

Project Name: _____ Unit Tag: _____

Aston Dual Hydronic Unit
8 - 15 Tons 60Hz

GEOSTAR

Physical Data

Model	GTW			
	100	120	150	180
Compressor (2 each)	Scroll			
Factory Charge R410A, oz [kg]	62 [1.76]	62 [1.76]	62 [1.76]	62 [1.76]
Load Water Connection				
FPT - in	2	2	2	2
Source Water Connection				
FPT - in	2	2	2	2
Weight - Operating, lb [kg]	390 [177]	400 [181]	400 [181]	420 [190]
Weight - Packaged, lb [kg]	385 [175]	395 [179]	395 [179]	415 [188]

3/9/09

Electrical Data

Model	Supply Circuit	Rated Voltage	Voltage Min/Max	Compressor*				Load Pump FLA	Source Pump FLA	Total Unit FLA	Min Circ Amp	Max Fuse/ HACR
				MCC	RLA	LRA	LRA**					
100	L1/L2	208-230/60/1	187/253	41.2	26.4	134.0	47.0	-	-	26.4	33.0	50
	L3/L4	208-230/60/1	187/253	41.2	26.4	134.0	47.0	4.2	4.2	34.8	41.4	60
	Single	208-230/60/3	187/253	24.9	16.0	110.0	-	-	-	32.0	36.0	50
	Single	460/60/3	414/506	12.1	7.8	52.0	-	-	-	15.6	17.6	25
	Single	575/60/3	517/633	8.9	5.7	38.9	-	-	-	11.4	12.8	15
120	L1/L2	208-230/60/1	187/253	47.0	30.1	145.0	51.0	-	-	30.1	37.6	60
	L3/L4	208-230/60/1	187/253	47.0	30.1	145.0	51.0	4.2	4.2	38.5	46.0	70
	Single	208-230/60/3	187/253	28.0	17.3	120.0	-	-	-	34.6	38.9	50
	Single	460/60/3	414/506	15.0	9.6	70.0	-	-	-	19.2	21.6	30
	Single	575/60/3	517/633	12.5	8.0	53.0	-	-	-	16.0	18.0	25
150	L1/L2	208-230/60/1	187/253	42.0	26.9	145.0	51.0	-	-	26.9	33.6	60
	L3/L4	208-230/60/1	187/253	42.0	26.9	145.0	51.0	4.2	4.2	35.3	42.0	60
	Single	208-230/60/3	187/253	35.0	22.4	190.0	-	-	-	44.8	50.4	70
	Single	460/60/3	414/506	19.0	12.2	87.0	-	-	-	24.4	27.5	30
	Single	575/60/3	517/633	15.0	9.6	62.0	-	-	-	19.2	21.6	30
180	L1/L2	208-230/60/1	187/253	50.0	32.1	185.0	65.0	-	-	32.1	40.1	70
	L3/L4	208-230/60/1	187/253	50.0	32.1	185.0	65.0	4.2	4.2	40.5	48.5	80
	Single	208-230/60/3	187/253	39.0	26.0	190.0	-	-	-	52.0	58.5	80
	Single	460/60/3	414/506	19.0	13.0	100.0	-	-	-	26.0	29.3	40
	Single	575/60/3	517/633	14.5	9.3	72.0	-	-	-	18.6	20.9	30

7/22/09

HACR circuit breaker in USA only
* Ratings per each compressor - unit supplied with two
** With optional GeoStart (single phase only)

The manufacturer works continually to improve its products. As a result, the design and specifications of each product at the time of order may be changed without notice. Purchaser's approval of this data set signifies that the equipment is acceptable under the provisions of the job specification. Statements and other information contained herein are not express warranties and do not form the basis of any bargain between the parties, but are merely the manufacturer's opinion or commendation of its products.

Contractor: _____ P.O.: _____

Engineer: _____

Project Name: _____ Unit Tag: _____

Aston Dual Hydronic Unit
8 - 15 Tons 60Hz

GEOSTAR

Load and Source Pressure Drop

Model	GPM	Pressure Drop (psi)				
		30°F	50°F	70°F	90°F	110°F
100	15	1.0	0.8	0.5	0.3	0.1
	23	2.5	2.2	2.0	1.7	1.3
	30	3.8	3.6	3.3	3.1	2.4
	34	4.5	4.3	4.0	3.8	3.0
120	18	1.6	1.3	1.1	0.8	0.6
	28	3.4	3.2	2.9	2.7	2.1
	36	4.9	4.7	4.4	4.2	3.3
	40	5.6	5.4	5.1	4.9	3.9
150	21	2.1	1.9	1.6	1.4	1.0
	32	4.2	3.9	3.7	3.4	2.7
	42	6.0	5.8	5.5	5.3	4.2
	50	7.5	7.3	7.0	6.8	5.5
180	24	2.7	2.4	2.2	1.9	1.5
	36	4.9	4.7	4.4	4.2	3.3
	48	7.1	6.9	6.6	6.4	5.1
	60	9.3	9.1	8.8	8.6	7.0

3/9/09

Reference Calculations

Heating Calculations:	Cooling Calculations:
$LWT = EWT - \frac{HE}{GPM \times 500^*}$	$LWT = EWT + \frac{HR}{GPM \times 500^*}$

NOTE: * When using water. Use 485 for 15% methanol/water or Environol solution.

Legend

Abbreviations and Definitions

ELT = entering load fluid temperature to heat pump
LLT = leaving load fluid temperature from heat pump
LGPM = load flow in gallons per minute
LWPD = load heat exchanger water pressure drop
EST = entering source fluid temperature to heat pump
LST = leaving source fluid temperature from heat pump
SGPM = source flow in gallons per minute
SWPD = source heat exchanger water pressure drop
EER = cooling energy effciency (TC/KW)

PSI = pressure drop in pounds per square inch
FT HD = pressure drop in feet of head
KW = kilowatt
HR = heat rejected in MBTUH
TC = total cooling capacity in MBTUH
COP = coefficient of performance (HC/KW x 3.413)
HC = heating capacity in MBTUH
HE = heat of extraction in MBTUH

The manufacturer works continually to improve its products. As a result, the design and specifications of each product at the time of order may be changed without notice. Purchaser's approval of this data set signifies that the equipment is acceptable under the provisions of the job specification. Statements and other information contained herein are not express warranties and do not form the basis of any bargain between the parties, but are merely the manufacturer's opinion or commendation of its products.

Contractor: _____ P.O.: _____

Engineer: _____

Project Name: _____ Unit Tag: _____

Antifreeze Correction

Catalog performance can be corrected for antifreeze use. Please use the following table and note the example given.

Antifreeze Type	Antifreeze % by wt	Heating		Cooling		Pressure Drop
		Load	Source	Load	Source	
EWT - °F [°C]		**80 [26.7]**	**30 [-1.1]**	**50 [10.0]**	**90 [32.2]**	**30 [-1.1]**
Water	0	1.000	1.000	1.000	1.000	1.000
Ethylene Glycol	10	0.990	0.973	0.976	0.991	1.075
	20	0.978	0.943	0.947	0.979	1.163
	30	0.964	0.917	0.921	0.965	1.225
	40	0.953	0.890	0.897	0.955	1.324
	50	0.942	0.865	0.872	0.943	1.419
Propylene Glycol	10	0.981	0.958	0.959	0.981	1.130
	20	0.967	0.913	0.921	0.969	1.270
	30	0.946	0.854	0.869	0.950	1.433
	40	0.932	0.813	0.834	0.937	1.614
	50	0.915	0.770	0.796	0.922	1.816
Ethanol	10	0.986	0.927	0.945	0.991	1.242
	20	0.967	0.887	0.906	0.972	1.343
	30	0.944	0.856	0.869	0.947	1.383
	40	0.926	0.815	0.830	0.930	1.523
	50	0.907	0.779	0.795	0.911	1.639
Methanol	10	0.985	0.957	0.962	0.986	1.127
	20	0.969	0.924	0.929	0.970	1.197
	30	0.950	0.895	0.897	0.951	1.235
	40	0.935	0.863	0.866	0.936	1.323
	50	0.919	0.833	0.836	0.920	1.399

WARNING: Gray area represents antifreeze concentrations greater than 35% by weight and should be avoided due to the extreme performance penalty they represent.

Antifreeze Correction Example

Antifreeze solution is propylene glycol 20% by weight for the source and methanol 10% for the load. Determine the corrected heating at 30°F source and 80°F load as well as pressure drop at 30°F for an G Series GTW120. Also, determine the corrected cooling at 90°F source and 50°F load.

The corrected heating capacity at 30°F/80°F would be:
98,500 MBTUH x 0.913 x 0.985 = 88,582 Btu/h
The corrected cooling capacity at 90°F/50°F would be:
113,200 x 0.969 x 0.962 = 105,523 Btu/h
The corrected pressure drop at 30°F and 36 gpm would be:
4.9 psi x 1.270 = 6.22 psi

The manufacturer works continually to improve its products. As a result, the design and specifications of each product at the time of order may be changed without notice. Purchaser's approval of this data set signifies that the equipment is acceptable under the provisions of the job specification. Statements and other information contained herein are not express warranties and do not form the basis of any bargain between the parties, but are merely the manufacturer's opinion or commendation of its products.

Contractor: _____ P.O.: _____

Engineer: _____

Project Name: _____ Unit Tag: _____

Aston Dual Hydronic Unit
8 - 15 Tons 60Hz

GEOSTAR

GTW100 - Performance Data

Cooling Capacity

Source		Load Flow - 15 GPM							Load Flow - 23 GPM						Load Flow - 30 GPM					
EST °F	Flow GPM	ELT °F	LLT °F	TC MBTUH	Power kW	HR MBTUH	EER	LST °F	LLT °F	TC MBTUH	Power kW	HR MBTUH	EER	LST °F	LLT °F	TC MBTUH	Power kW	HR MBTUH	EER	LST °F
30	15	50	35.6	108.0	3.80	121.0	28.4	46.1	40.3	111.7	3.91	125.1	28.6	46.7	42.3	115.0	4.00	128.6	28.8	47.2
		70	54.3	117.9	3.90	131.2	30.2	47.5	59.4	121.7	3.99	135.3	30.5	48.0	61.7	125.0	4.07	138.9	30.7	48.5
		90	73.0	127.9	4.00	141.5	32.0	48.9	78.6	131.7	4.07	145.6	32.3	49.4	81.0	135.0	4.13	149.1	32.7	49.9
		110	91.6	137.8	4.10	151.8	33.6	50.2	97.7	141.6	4.15	155.8	34.1	50.8	100.3	145.0	4.20	159.3	34.5	51.2
	23	50	35.3	110.1	3.69	122.7	29.8	40.7	40.1	113.8	3.80	126.7	29.9	41.0	42.2	116.9	3.89	130.2	30.0	41.3
		70	54.0	120.3	3.76	133.1	32.0	41.6	59.2	124.1	3.86	137.3	32.2	41.9	61.5	127.5	3.94	141.0	32.3	42.3
		90	72.6	130.4	3.83	143.5	34.1	42.5	78.3	134.5	3.92	147.9	34.4	42.9	80.8	138.1	3.99	151.7	34.6	43.2
		110	91.3	140.6	3.90	153.9	36.1	43.4	97.4	144.9	3.97	158.5	36.5	43.8	100.1	148.7	4.04	162.5	36.8	44.1
	30	50	35.1	112.0	3.60	124.3	31.1	38.3	40.0	115.5	3.71	128.2	31.2	38.5	42.1	118.6	3.80	131.6	31.2	38.8
		70	53.7	122.3	3.64	134.8	33.6	39.0	59.0	126.3	3.74	139.1	33.7	39.3	61.4	129.7	3.83	142.8	33.8	39.5
		90	72.3	132.7	3.68	145.2	36.1	39.7	78.1	137.0	3.78	149.9	36.3	40.0	80.6	140.9	3.87	154.1	36.4	40.3
		110	90.9	143.0	3.72	155.7	38.4	40.4	97.1	147.8	3.82	160.8	38.7	40.7	99.9	152.0	3.90	165.3	39.0	41.0
50	15	50	36.6	100.3	5.23	118.1	19.2	65.7	41.0	103.7	5.33	121.9	19.5	66.2	42.9	106.7	5.41	125.2	19.7	66.7
		70	55.1	111.5	5.37	129.8	20.8	67.3	60.0	115.0	5.45	133.6	21.1	67.8	62.1	118.1	5.52	137.0	21.4	68.3
		90	73.6	122.7	5.51	141.4	22.3	68.9	79.0	126.3	5.57	145.3	22.7	69.4	81.4	129.6	5.63	148.8	23.0	69.8
		110	92.2	133.9	5.65	153.1	23.7	70.4	98.0	137.7	5.69	157.1	24.2	70.9	100.6	141.0	5.73	160.6	24.6	71.4
	23	50	36.4	102.1	5.09	119.4	20.0	60.4	40.8	105.4	5.18	123.1	20.3	60.7	42.8	108.4	5.26	126.3	20.6	61.0
		70	54.9	113.5	5.19	131.2	21.9	61.4	59.8	117.2	5.27	135.1	22.2	61.7	62.0	120.4	5.34	138.6	22.6	62.0
		90	73.3	124.9	5.28	142.9	23.6	62.4	78.8	128.9	5.35	147.1	24.1	62.8	81.2	132.3	5.41	150.8	24.5	63.1
		110	91.8	136.3	5.38	154.7	25.3	63.5	97.8	140.6	5.44	159.1	25.9	63.8	100.4	144.3	5.49	163.1	26.3	64.2
	30	50	36.2	103.6	4.98	120.6	20.8	58.0	40.7	106.9	5.06	124.2	21.2	58.3	42.7	109.9	5.13	127.3	21.4	58.5
		70	54.6	115.3	5.03	132.4	22.9	58.8	59.7	119.0	5.11	136.4	23.3	59.1	61.8	122.3	5.18	140.0	23.6	59.3
		90	73.1	126.9	5.09	144.2	25.0	59.6	78.6	131.1	5.16	148.7	25.4	59.9	81.0	134.8	5.23	152.6	25.8	60.2
		110	91.5	138.5	5.14	156.0	26.9	60.4	97.6	143.2	5.21	161.0	27.5	60.7	100.2	147.3	5.28	165.2	27.9	61.0
70	15	50	37.7	92.5	6.65	115.2	13.9	85.4	41.7	95.6	6.74	118.7	14.2	85.8	43.4	98.4	6.83	121.7	14.4	86.2
		70	56.0	105.0	6.83	128.3	15.4	87.1	60.6	108.3	6.91	131.9	15.7	87.6	62.6	111.3	6.97	135.1	16.0	88.0
		90	74.3	117.4	7.02	141.4	16.7	88.8	79.5	121.0	7.07	145.1	17.1	89.4	81.7	124.1	7.12	148.4	17.4	89.8
		110	Operation not recommended																	
	23	50	37.5	94.0	6.49	116.1	14.5	80.1	41.6	97.1	6.56	119.5	14.8	80.4	43.3	99.8	6.63	122.4	15.1	80.6
		70	55.8	106.7	6.61	129.2	16.1	81.2	60.4	110.2	6.67	132.9	16.5	81.6	62.5	113.2	6.73	136.2	16.8	81.8
		90	74.1	119.4	6.74	142.4	17.7	82.4	79.3	123.2	6.79	146.4	18.2	82.7	81.6	126.6	6.83	149.9	18.5	83.0
		110	Operation not recommended																	
	30	50	37.3	95.3	6.35	116.9	15.0	77.8	41.4	98.4	6.40	120.2	15.4	78.0	43.3	101.1	6.45	123.1	15.7	78.2
		70	55.6	108.2	6.42	130.1	16.8	78.7	60.3	111.8	6.47	133.8	17.3	78.9	62.3	114.9	6.52	137.1	17.6	79.1
		90	73.9	121.1	6.49	143.2	18.7	79.5	79.1	125.1	6.54	147.5	19.1	79.8	81.4	128.7	6.58	151.2	19.5	80.1
		110	Operation not recommended																	
90	15	50	38.7	84.8	8.08	112.3	10.5	105.0	42.4	87.6	8.16	115.5	10.7	105.4	44.0	90.1	8.24	118.2	10.9	105.8
		70	56.9	98.5	8.30	126.8	11.9	106.9	61.2	101.6	8.37	130.2	12.1	107.4	63.0	104.4	8.42	133.1	12.4	107.8
		90	75.0	112.2	8.53	141.3	13.2	108.8	79.9	115.7	8.57	144.9	13.5	109.3	82.1	118.7	8.61	148.1	13.8	109.7
		110	Operation not recommended																	
	23	50	38.5	85.9	7.89	112.8	10.9	99.8	42.3	88.8	7.94	115.9	11.2	100.1	43.9	91.3	7.99	118.6	11.4	100.3
		70	56.7	99.9	8.04	127.3	12.4	101.1	61.0	103.2	8.08	130.7	12.8	101.4	62.9	106.0	8.12	133.8	13.1	101.6
		90	74.8	113.9	8.19	141.8	13.9	102.3	79.8	117.6	8.22	145.6	14.3	102.7	81.9	120.8	8.25	149.0	14.6	103.0
		110	Operation not recommended																	
	30	50	38.4	86.9	7.73	113.2	11.2	97.5	42.2	89.8	7.75	116.2	11.6	97.7	43.8	92.4	7.78	118.9	11.9	97.9
		70	56.5	101.1	7.81	127.7	12.9	98.5	60.9	104.5	7.84	131.2	13.3	98.7	62.8	107.5	7.86	134.3	13.7	99.0
		90	74.6	115.3	7.90	142.2	14.6	99.5	79.6	119.2	7.92	146.2	15.1	99.7	81.8	122.6	7.94	149.7	15.4	100.0
		110	Operation not recommended																	
110	15	50	39.7	77.0	9.50	109.4	8.1	124.6	43.1	79.6	9.58	112.2	8.3	125.0	44.5	81.8	9.65	114.7	8.5	125.3
		70	57.7	92.0	9.77	125.3	9.4	126.7	61.7	95.0	9.83	128.5	9.7	127.1	63.5	97.5	9.88	131.2	9.9	127.5
		90	Operation not recommended																	
		110																		
	23	50	39.6	77.8	9.29	109.5	8.4	119.5	43.0	80.4	9.32	112.3	8.6	119.8	44.5	82.8	9.36	114.7	8.8	120.0
		70	57.6	93.1	9.46	125.4	9.8	120.9	61.6	96.2	9.49	128.6	10.1	121.2	63.4	98.9	9.52	131.4	10.4	121.4
		90	Operation not recommended																	
		110																		
	30	50	39.5	78.5	9.10	109.5	8.6	117.3	42.9	81.2	9.10	112.3	8.9	117.5	44.4	83.6	9.10	114.6	9.2	117.6
		70	57.5	94.0	9.20	125.4	10.2	118.4	61.5	97.2	9.20	128.6	10.6	118.6	63.3	100.1	9.20	131.5	10.9	118.8
		90	Operation not recommended																	
		110																		

4/1/10

NOTE: For part load application, divide capacity by 2.

The manufacturer works continually to improve its products. As a result, the design and specifications of each product at the time of order may be changed without notice. Purchaser's approval of this data set signifies that the equipment is acceptable under the provisions of the job specification. Statements and other information contained herein are not express warranties and do not form the basis of any bargain between the parties, but are merely the manufacturer's opinion or commendation of its products.

Contractor: _____ P.O.: _____

Engineer: _____

Project Name: _____ Unit Tag: _____

Aston Dual Hydronic Unit
8 - 15 Tons 60Hz

GEOSTAR

GTW100 - Performance Data

Heating Capacity

Source		Load Flow - 15 GPM							Load Flow - 23 GPM						Load Flow - 30 GPM					
EWT °F	Flow GPM	ELT °F	LLT °F	HC MBTUH	Power kW	HE MBTUH	COP	LST °F	LLT °F	HC MBTUH	Power kW	HE MBTUH	COP	LST °F	LLT °F	HC MBTUH	Power kW	HE MBTUH	COP	LST °F
30	23	60	72.2	91.3	5.01	74.2	5.3	20.1	68.2	94.5	4.85	78.0	5.7	23.2	66.5	97.3	4.71	81.2	6.1	24.6
		80	91.9	89.2	6.64	66.6	3.9	21.1	88.0	92.1	6.46	70.1	4.2	23.9	86.3	94.7	6.31	73.2	4.4	25.1
		100	111.6	87.2	8.28	58.9	3.1	22.1	107.8	89.8	8.08	62.2	3.3	24.6	106.1	92.1	7.91	65.1	3.4	25.7
		120	131.3	85.1	9.91	51.3	2.5	23.2	127.6	87.4	9.70	54.3	2.6	25.3	126.0	89.5	9.51	57.0	2.8	26.2
	30	60	72.3	92.0	5.10	74.6	5.3	20.1	68.4	96.3	4.94	79.4	5.7	23.1	66.7	100.0	4.80	83.6	6.1	24.4
		80	92.0	89.9	6.77	66.8	3.9	21.1	88.2	93.9	6.59	71.4	4.2	23.8	86.5	97.4	6.43	75.4	4.4	25.0
		100	111.7	87.9	8.43	59.1	3.1	22.1	108.0	91.6	8.24	63.5	3.3	24.5	106.3	94.8	8.07	67.3	3.4	25.5
		120	131.4	85.8	10.10	51.3	2.5	23.2	127.8	89.2	9.89	55.5	2.6	25.2	126.1	92.2	9.70	59.1	2.8	26.1
50	15	60	73.6	102.2	5.00	85.1	6.0	38.7	69.2	105.4	4.84	88.9	6.4	42.3	67.2	108.3	4.70	92.3	6.8	43.8
		80	93.3	100.1	6.62	77.5	4.4	39.7	89.0	103.1	6.44	81.1	4.7	42.9	87.0	105.7	6.29	84.2	4.9	44.4
		100	113.1	98.1	8.20	69.9	3.5	37.4	108.8	100.7	8.00	73.3	3.7	43.6	106.9	103.1	7.88	76.2	3.8	44.9
		120	132.8	96.0	9.87	62.3	2.9	41.7	128.6	98.4	9.65	65.5	3.0	44.3	126.7	100.5	9.47	68.2	3.1	45.5
	23	60	74.4	107.7	5.12	90.2	6.2	38.0	69.7	111.9	4.95	95.0	6.6	41.7	67.7	115.5	4.81	99.1	7.0	43.4
		80	94.1	105.6	6.78	82.5	4.6	39.0	89.5	109.5	6.59	87.0	4.9	42.4	87.5	112.9	6.43	91.0	5.1	43.9
		100	113.8	103.5	8.44	74.7	3.6	40.0	109.3	107.2	8.23	79.1	3.8	43.1	107.4	110.3	8.06	82.9	4.0	44.5
		120	133.5	101.5	10.10	67.0	2.9	41.1	129.1	104.8	9.87	71.1	3.1	43.8	127.2	107.7	9.68	74.7	3.3	45.0
	30	60	75.0	112.4	5.23	94.6	6.3	37.4	70.2	117.5	5.06	100.2	6.8	41.3	68.1	121.9	4.90	105.1	7.3	43.0
		80	94.7	110.4	6.92	86.8	4.7	38.4	90.0	115.1	6.73	92.2	5.0	42.0	88.0	119.3	6.56	96.9	5.3	43.5
		100	114.4	108.3	8.61	78.9	3.7	39.5	109.8	112.8	8.40	84.1	3.9	42.7	107.8	116.7	8.21	88.7	4.2	44.1
		120	134.2	106.3	10.30	71.1	3.0	40.5	129.6	110.4	10.07	76.1	3.2	43.4	127.6	114.1	9.87	80.4	3.4	44.6
70	15	60	75.2	113.9	5.10	96.5	6.5	57.1	70.3	118.4	4.94	101.6	7.0	61.2	68.2	122.4	4.80	106.0	7.5	62.9
		80	94.9	111.8	6.74	88.8	4.9	58.2	90.1	116.1	6.57	93.7	5.2	61.9	88.0	119.8	6.41	97.9	5.5	63.5
		100	114.6	109.8	8.39	81.1	3.8	59.2	109.9	113.7	8.19	85.8	4.1	62.5	107.8	117.2	8.02	89.8	4.3	64.0
		120	134.4	107.7	10.03	73.5	3.1	60.2	129.7	111.4	9.82	77.9	3.3	63.2	127.6	114.6	9.63	81.7	3.5	64.6
	23	60	76.5	124.0	5.24	106.1	6.9	55.8	71.2	129.2	5.06	111.9	7.5	60.3	68.9	133.8	4.91	117.0	8.0	62.2
		80	96.3	122.0	6.92	98.3	5.2	56.9	91.0	126.9	6.73	103.9	5.5	61.0	88.7	131.2	6.55	108.8	5.9	62.7
		100	116.0	119.9	8.60	90.6	4.1	57.9	110.8	124.5	8.39	95.9	4.4	61.7	108.6	128.6	8.20	100.6	4.6	63.3
		120	135.7	117.8	10.28	82.8	3.4	59.0	130.6	122.2	10.05	87.9	3.6	62.4	128.4	126.0	9.85	92.4	3.7	63.8
	30	60	77.7	132.9	5.37	114.6	7.3	54.7	72.1	138.7	5.17	121.0	7.9	59.5	69.6	143.7	5.00	126.7	8.4	61.6
		80	97.4	130.8	7.08	106.7	5.4	55.8	91.9	136.3	6.86	112.9	5.8	60.2	89.4	141.1	6.68	118.3	6.2	62.1
		100	117.2	128.8	8.79	98.8	4.3	56.8	111.7	134.0	8.56	104.8	4.6	60.9	109.2	138.5	8.36	110.0	4.9	62.7
		120	136.9	126.7	10.50	90.9	3.5	57.9	131.4	131.6	10.25	96.7	3.8	61.6	129.1	135.9	10.03	101.7	4.0	63.2
90	15	60	76.7	125.6	5.20	107.9	7.1	75.6	71.4	131.4	5.04	114.2	7.6	80.1	69.1	136.5	4.90	119.8	8.2	82.0
		80	96.5	123.5	6.87	100.1	5.3	76.7	91.2	129.1	6.69	106.2	5.7	80.8	88.9	133.9	6.53	111.6	6.0	82.6
		100	Operation not recommended																	
		120																		
	23	60	78.7	140.4	5.36	122.1	7.7	73.7	72.7	146.6	5.17	128.9	8.3	78.8	70.1	152.0	5.01	134.9	8.9	81.0
		80	98.4	138.3	7.06	114.2	5.7	74.8	92.5	144.2	6.86	120.9	6.2	79.5	90.0	149.4	6.68	126.6	6.6	81.6
		100	118.2	136.3	8.76	106.4	4.6	75.8	112.3	141.9	8.54	112.8	4.9	80.2	109.8	146.8	8.34	118.3	5.2	82.1
		120	Operation not recommended																	
	30	60	80.4	153.3	5.50	134.6	8.2	72.1	73.9	159.9	5.29	141.8	8.9	77.7	71.0	165.6	5.10	148.2	9.5	80.1
		80	100.2	151.3	7.23	126.6	6.1	73.1	93.7	157.5	7.00	133.6	6.6	78.4	90.9	163.0	6.80	139.8	7.0	80.7
		100	119.9	149.2	8.97	118.7	4.9	74.2	113.5	155.2	8.72	125.4	5.2	79.1	110.7	160.4	8.50	131.4	5.5	81.2
		120	Operation not recommended																	

4/1/10

NOTE: For part load application, divide capacity by 2.

The manufacturer works continually to improve its products. As a result, the design and specifications of each product at the time of order may be changed without notice. Purchaser's approval of this data set signifies that the equipment is acceptable under the provisions of the job specification. Statements and other information contained herein are not express warranties and do not form the basis of any bargain between the parties, but are merely the manufacturer's opinion or commendation of its products.

Contractor: _____ P.O.: _____

Engineer: _____

Project Name: _____ Unit Tag: _____

Aston Dual Hydronic Unit
8 - 15 Tons 60Hz

GEOSTAR

GTW120 - Performance Data

Cooling Capacity

Source		Load Flow - 18 GPM							Load Flow - 28 GPM						Load Flow - 36 GPM					
EST °F	Flow GPM	ELT °F	LLT °F	TC MBTUH	Power kW	HR MBTUH	EER	LST °F	LLT °F	TC MBTUH	Power kW	HR MBTUH	EER	LST °F	LLT °F	TC MBTUH	Power kW	HR MBTUH	EER	LST °F
30	18	50	35.8	128.0	5.26	145.9	24.3	49.5	40.5	132.6	5.30	150.7	25.0	50.1	42.4	136.3	5.34	154.5	25.5	50.6
		70	54.0	143.7	5.43	162.2	26.5	51.6	59.4	148.9	5.47	167.5	27.2	52.3	61.5	153.0	5.51	171.8	27.8	52.9
		90	72.3	159.3	5.60	178.4	28.5	53.8	78.2	165.1	5.64	184.4	29.2	54.6	80.6	169.7	5.68	189.1	29.9	55.2
		110	90.6	175.0	5.77	194.7	30.3	56.0	97.0	181.3	5.81	201.2	31.2	56.8	99.6	186.4	5.85	206.4	31.9	57.5
	28	50	35.4	131.3	5.05	148.6	26.0	42.9	40.3	136.1	5.10	153.5	26.7	43.3	42.2	139.9	5.13	157.4	27.3	43.7
		70	53.6	147.6	5.18	165.2	28.5	44.4	59.1	152.9	5.22	170.7	29.3	44.8	61.3	157.1	5.26	175.1	29.9	45.2
		90	71.8	163.8	5.31	181.9	30.9	45.8	77.9	169.7	5.35	188.0	31.7	46.3	80.3	174.4	5.38	192.8	32.4	46.8
		110	90.0	180.0	5.43	198.5	33.1	47.3	96.7	186.5	5.48	205.2	34.1	47.8	99.3	191.7	5.51	210.5	34.8	48.3
	36	50	35.1	134.0	4.89	150.7	27.4	40.0	40.1	138.8	4.93	155.7	28.2	40.4	42.1	142.7	4.96	159.6	28.8	40.6
		70	53.3	150.7	4.98	167.7	30.3	41.2	58.8	156.1	5.02	173.2	31.1	41.5	61.1	160.5	5.05	177.7	31.8	41.8
		90	71.4	167.3	5.07	184.6	33.0	42.3	77.6	173.4	5.11	190.8	33.9	42.7	80.1	178.2	5.15	195.8	34.6	43.1
		110	89.6	184.0	5.16	201.6	35.7	43.4	96.4	190.7	5.20	208.4	36.6	43.9	99.1	196.0	5.24	213.9	37.4	44.3
50	18	50	36.7	119.8	6.79	142.9	17.6	69.1	41.1	124.1	6.84	147.4	18.1	69.7	42.9	127.5	6.89	151.0	18.5	70.1
		70	55.0	135.4	6.95	159.1	19.5	71.2	60.0	140.3	7.01	164.2	20.0	71.9	62.0	144.2	7.06	168.3	20.4	72.4
		90	73.2	151.1	7.12	175.4	21.2	73.4	78.8	156.5	7.18	181.0	21.8	74.1	81.1	160.9	7.23	185.6	22.3	74.7
		110	91.5	166.8	7.29	191.6	22.9	75.6	97.7	172.8	7.35	197.9	23.5	76.4	100.1	177.6	7.40	202.8	24.0	77.0
	28	50	36.2	123.8	6.51	146.0	19.0	62.7	40.8	128.3	6.56	150.7	19.5	63.1	42.7	131.8	6.61	154.4	20.0	63.4
		70	54.4	140.1	6.64	162.8	21.1	64.2	59.6	145.2	6.70	168.0	21.7	64.6	61.7	149.2	6.74	172.2	22.1	65.0
		90	72.6	156.4	6.78	179.6	23.1	65.6	78.4	162.1	6.83	185.4	23.7	66.1	80.7	166.6	6.88	190.1	24.2	66.5
		110	90.8	172.8	6.91	196.3	25.0	67.1	97.2	179.0	6.97	202.8	25.7	67.6	99.8	184.0	7.01	207.9	26.2	68.1
	36	50	35.9	127.1	6.29	148.5	20.2	59.9	40.6	131.6	6.34	153.3	20.8	60.2	42.5	135.3	6.38	157.1	21.2	60.5
		70	54.0	143.9	6.40	165.7	22.5	61.0	59.4	149.1	6.45	171.1	23.1	61.4	61.5	153.2	6.49	175.4	23.6	61.7
		90	72.1	160.7	6.50	182.9	24.7	62.2	78.1	166.5	6.55	188.9	25.4	62.6	80.5	171.2	6.60	193.7	26.0	62.9
		110	90.3	177.6	6.60	200.1	26.9	63.3	96.9	184.0	6.66	206.7	27.6	63.8	99.5	189.1	6.70	212.0	28.2	64.1
70	18	50	37.6	111.5	8.31	139.9	13.4	88.6	41.7	115.5	8.38	144.1	13.8	89.2	43.4	118.8	8.44	147.5	14.1	89.7
		70	55.9	127.2	8.48	156.1	15.0	90.8	60.6	131.8	8.55	160.9	15.4	91.5	62.5	135.4	8.61	164.8	15.7	92.0
		90	74.1	142.8	8.65	172.3	16.5	93.0	79.4	148.0	8.72	177.7	17.0	93.7	81.5	152.1	8.78	182.1	17.3	94.3
		110	Operation not recommended																	
	28	50	37.1	116.3	7.97	143.5	14.6	82.5	41.4	120.5	8.03	147.9	15.0	82.9	43.1	123.8	8.09	151.4	15.3	83.2
		70	55.3	132.7	8.11	160.4	16.4	83.9	60.2	137.5	8.17	165.4	16.8	84.4	62.1	141.3	8.23	169.4	17.2	84.7
		90	73.4	149.1	8.25	177.2	18.1	85.4	79.0	154.5	8.32	182.9	18.6	85.9	81.2	158.8	8.37	187.3	19.0	86.3
		110	Operation not recommended																	
	36	50	36.7	120.1	7.70	146.4	15.6	79.8	41.1	124.4	7.76	150.9	16.0	80.1	42.9	127.9	7.81	154.5	16.4	80.3
		70	54.8	137.1	7.81	163.8	17.6	80.9	59.9	142.1	7.87	168.9	18.0	81.3	61.9	146.0	7.93	173.1	18.4	81.5
		90	72.9	154.1	7.93	181.2	19.4	82.1	78.6	159.7	7.99	187.0	20.0	82.5	80.9	164.1	8.05	191.6	20.4	82.8
		110	Operation not recommended																	
90	18	50	38.5	103.3	9.84	136.8	10.5	108.2	42.4	107.0	9.92	140.8	10.8	108.8	43.9	110.0	9.98	144.0	11.0	109.2
		70	56.8	118.9	10.00	153.0	11.9	110.4	61.2	123.2	10.09	157.6	12.2	111.0	63.0	126.7	10.15	161.3	12.5	111.5
		90	75.0	134.6	10.17	169.3	13.2	112.6	80.0	139.4	10.25	174.4	13.6	113.3	82.0	143.3	10.32	178.5	13.9	113.8
		110	Operation not recommended																	
	28	50	37.9	108.8	9.43	140.9	11.5	102.3	42.0	112.7	9.50	145.1	11.9	102.6	43.6	115.8	9.56	148.5	12.1	102.9
		70	56.1	125.3	9.57	157.9	13.1	103.7	60.7	129.8	9.65	162.7	13.4	104.1	62.6	133.4	9.71	166.5	13.7	104.5
		90	74.2	141.8	9.72	174.9	14.6	105.2	79.5	146.9	9.80	180.3	15.0	105.7	81.6	151.0	9.86	184.6	15.3	106.1
		110	Operation not recommended																	
	36	50	37.4	113.2	9.10	144.2	12.4	99.6	41.6	117.2	9.17	148.5	12.8	99.9	43.3	120.5	9.23	152.0	13.1	100.1
		70	55.5	130.3	9.23	161.8	14.1	100.8	60.4	135.0	9.30	166.8	14.5	101.1	62.3	138.8	9.36	170.7	14.8	101.4
		90	73.6	147.5	9.36	179.4	15.8	102.0	79.1	152.8	9.43	185.0	16.2	102.3	81.3	157.1	9.49	189.5	16.5	102.6
		110	Operation not recommended																	
110	18	50	39.4	95.0	11.36	133.8	8.4	127.8	43.0	98.4	11.45	137.5	8.6	128.3	44.4	101.2	11.53	140.5	8.8	128.7
		70	57.7	110.7	11.53	150.0	9.6	130.0	61.8	114.7	11.62	154.3	9.9	130.6	63.5	117.9	11.70	157.8	10.1	131.0
		90	Operation not recommended																	
		110																		
	28	50	38.8	101.2	10.88	138.4	9.3	122.0	42.5	104.9	10.97	142.3	9.6	122.4	44.0	107.8	11.04	145.5	9.8	122.7
		70	56.9	117.8	11.04	155.5	10.7	123.5	61.3	122.1	11.13	160.0	11.0	123.9	63.0	125.5	11.20	163.7	11.2	124.2
		90	Operation not recommended																	
		110																		
	36	50	38.2	106.2	10.50	142.0	10.1	119.5	42.1	110.0	10.58	146.1	10.4	119.7	43.7	113.1	10.65	149.4	10.6	120.0
		70	56.3	123.5	10.64	159.9	11.6	120.7	60.9	128.0	10.73	164.6	11.9	121.0	62.7	131.6	10.80	168.4	12.2	121.2
		90	Operation not recommended																	
		110																		

4/1/10

NOTE: For part load application, divide capacity by 2.

The manufacturer works continually to improve its products. As a result, the design and specifications of each product at the time of order may be changed without notice. Purchaser's approval of this data set signifies that the equipment is acceptable under the provisions of the job specification. Statements and other information contained herein are not express warranties and do not form the basis of any bargain between the parties, but are merely the manufacturer's opinion or commendation of its products.

Contractor: _____ P.O.: _____

Engineer: _____

Project Name: _____ Unit Tag: _____

Aston Dual Hydronic Unit
8 - 15 Tons 60Hz

GEOSTAR

GTW120 - Performance Data

Heating Capacity

Source		Load Flow - 18 GPM							Load Flow - 28 GPM						Load Flow - 36 GPM					
EWT °F	Flow GPM	ELT °F	LLT °F	HC MBTUH	Power kW	HE MBTUH	COP	LST °F	LLT °F	HC MBTUH	Power kW	HE MBTUH	COP	LST °F	LLT °F	HC MBTUH	Power kW	HE MBTUH	COP	LST °F
30	28	60	71.0	98.9	5.36	80.6	5.4	21.0	67.3	102.4	5.44	83.8	5.5	24.0	65.8	105.2	5.51	86.4	5.6	25.2
		80	90.7	96.2	7.16	71.8	3.9	22.0	87.1	99.6	7.26	74.9	4.0	24.7	85.7	102.4	7.34	77.3	4.1	25.7
		100	110.4	93.6	8.96	63.0	3.1	23.0	106.9	96.9	9.08	65.9	3.1	25.3	105.5	99.6	9.18	68.3	3.2	26.2
		120	130.1	90.9	10.76	54.2	2.5	24.0	126.7	94.2	10.90	57.0	2.5	25.9	125.4	96.9	11.01	59.3	2.6	26.7
	36	60	71.2	101.2	5.40	82.8	5.5	20.8	67.6	106.1	5.51	87.3	5.6	23.8	66.1	110.0	5.60	90.9	5.8	25.0
		80	90.9	98.5	7.20	74.0	4.0	21.8	87.4	103.4	7.33	78.4	4.1	24.4	86.0	107.2	7.43	81.9	4.2	25.5
		100	110.7	95.9	9.00	65.2	3.1	22.8	107.2	100.6	9.15	69.4	3.2	25.0	105.8	104.5	9.27	72.8	3.3	26.0
		120	130.4	93.2	10.80	56.4	2.5	23.7	127.0	97.9	10.97	60.5	2.6	25.7	125.7	101.7	11.10	63.8	2.7	26.5
50	18	60	72.6	113.4	5.53	94.5	6.0	39.5	68.4	116.9	5.59	97.8	6.1	43.0	66.7	119.7	5.63	100.5	6.2	44.4
		80	92.3	110.7	7.33	85.7	4.4	40.5	88.2	114.2	7.41	88.9	4.5	43.6	86.5	117.0	7.47	91.5	4.6	44.9
		100	112.0	108.0	9.13	76.9	3.5	41.5	108.0	111.5	9.23	80.0	3.5	44.3	106.3	114.2	9.30	82.5	3.6	45.4
		120	131.7	105.4	10.93	68.1	2.8	42.4	127.8	108.7	11.04	71.1	2.9	44.9	126.2	111.4	11.13	73.4	2.9	45.9
	28	60	73.3	119.7	5.63	100.5	6.2	38.8	68.9	124.5	5.70	105.1	6.4	42.5	67.1	128.4	5.76	108.7	6.5	44.0
		80	93.0	117.1	7.43	91.7	4.6	39.8	88.7	121.8	7.52	96.1	4.7	43.1	87.0	125.6	7.60	99.7	4.8	44.5
		100	112.7	114.4	9.23	82.9	3.6	40.8	108.5	119.1	9.34	87.2	3.7	43.8	106.8	122.8	9.43	90.7	3.8	45.0
		120	132.4	111.7	11.03	74.1	3.0	41.8	128.3	116.4	11.16	78.3	3.1	44.4	126.7	120.1	11.26	81.6	3.1	45.5
	36	60	73.9	124.8	5.70	105.4	6.4	38.3	69.3	130.6	5.79	110.9	6.6	42.1	67.5	135.3	5.87	115.2	6.8	43.6
		80	93.6	122.1	7.50	96.5	4.8	39.3	89.1	127.9	7.61	101.9	4.9	42.7	87.4	132.5	7.70	106.2	5.0	44.1
		100	113.3	119.5	9.30	87.7	3.8	40.3	108.9	125.2	9.43	93.0	3.9	43.4	107.2	129.7	9.53	97.2	4.0	44.6
		120	133.0	116.8	11.10	78.9	3.1	41.2	128.7	122.4	11.25	84.1	3.2	44.0	127.1	127.0	11.37	88.2	3.3	45.1
70	18	60	74.5	130.7	5.77	111.1	6.6	57.7	69.7	136.1	5.82	116.2	6.9	61.7	67.8	140.4	5.87	120.3	7.0	63.3
		80	94.2	128.1	7.57	102.2	5.0	58.6	89.5	133.4	7.64	107.3	5.1	62.3	87.6	137.6	7.70	111.3	5.2	63.8
		100	113.9	125.4	9.37	93.4	3.9	59.6	109.3	130.6	9.46	98.4	4.0	63.0	107.5	134.8	9.53	102.3	4.1	64.3
		120	133.6	122.7	11.17	84.6	3.2	60.6	129.1	127.9	11.28	89.4	3.3	63.6	127.3	132.1	11.37	93.3	3.4	64.8
	28	60	75.6	140.5	5.90	120.4	7.0	56.6	70.5	146.7	5.96	126.3	7.2	61.0	68.4	151.6	6.01	131.0	7.4	62.7
		80	95.3	137.9	7.70	111.6	5.3	57.6	90.3	143.9	7.78	117.4	5.4	61.6	88.3	148.8	7.85	122.0	5.6	63.2
		100	115.0	135.2	9.50	102.8	4.2	58.6	110.1	141.2	9.60	108.5	4.3	62.3	108.1	146.0	9.68	113.0	4.4	63.7
		120	134.7	132.5	11.30	94.0	3.4	59.6	129.9	138.5	11.42	99.5	3.6	62.9	128.0	143.3	11.51	104.0	3.6	64.2
	36	60	76.5	148.4	6.00	127.9	7.2	55.8	71.1	155.1	6.07	134.4	7.5	60.4	68.9	160.5	6.13	139.6	7.7	62.2
		80	96.2	145.7	7.80	119.1	5.5	56.8	90.9	152.4	7.89	125.5	5.7	61.0	88.8	157.8	7.97	130.6	5.8	62.7
		100	115.9	143.1	9.60	110.3	4.4	57.7	110.7	149.7	9.71	116.6	4.5	61.7	108.6	155.0	9.80	121.6	4.6	63.2
		120	135.6	140.4	11.40	101.5	3.6	58.7	130.5	147.0	11.53	107.6	3.7	62.3	128.5	152.2	11.63	112.5	3.8	63.7
90	18	60	76.5	148.1	6.00	127.6	7.2	75.8	71.1	155.3	6.06	134.6	7.5	80.4	68.9	161.0	6.10	140.2	7.7	82.2
		80	96.2	145.4	7.80	118.8	5.5	76.8	90.9	152.5	7.87	125.7	5.7	81.0	88.8	158.2	7.93	131.2	5.8	82.7
		100	Operation not recommended																	
		120																		
	28	60	77.9	161.4	6.17	140.3	7.7	74.4	72.1	168.8	6.22	147.6	8.0	79.5	69.7	174.8	6.27	153.4	8.2	81.5
		80	97.6	158.7	7.97	131.5	5.8	75.4	91.9	166.1	8.04	138.7	6.1	80.1	89.6	172.0	8.10	144.4	6.2	82.0
		100	117.3	156.0	9.77	122.7	4.7	76.4	111.7	163.4	9.86	129.7	4.9	80.7	109.4	169.2	9.93	135.4	5.0	82.5
		120	Operation not recommended																	
	36	60	79.1	172.0	6.30	150.5	8.0	73.3	72.8	179.7	6.36	158.0	8.3	78.7	70.3	185.8	6.40	164.0	8.5	80.9
		80	98.8	169.3	8.10	141.7	6.1	74.3	92.6	176.9	8.17	149.1	6.3	79.4	90.2	183.0	8.23	154.9	6.5	81.4
		100	118.5	166.7	9.90	132.9	4.9	75.2	112.4	174.2	9.99	140.1	5.1	80.0	110.0	180.3	10.07	145.9	5.2	81.9
		120	Operation not recommended																	

4/1/10

NOTE: For part load application, divide capacity by 2.

The manufacturer works continually to improve its products. As a result, the design and specifications of each product at the time of order may be changed without notice. Purchaser's approval of this data set signifies that the equipment is acceptable under the provisions of the job specification. Statements and other information contained herein are not express warranties and do not form the basis of any bargain between the parties, but are merely the manufacturer's opinion or commendation of its products.

Contractor: _____ P.O.: _____

Engineer: _____

Project Name: _____ Unit Tag: _____

Aston Dual Hydronic Unit
8 - 15 Tons 60Hz

GEOSTAR

GTW150 - Performance Data

Cooling Capacity

Source		Load Flow - 21 GPM							Load Flow - 32 GPM						Load Flow - 42 GPM					
EST °F	Flow GPM	ELT °F	LLT °F	TC MBTUH	Power kW	HR MBTUH	EER	LST °F	LLT °F	TC MBTUH	Power kW	HR MBTUH	EER	LST °F	LLT °F	TC MBTUH	Power kW	HR MBTUH	EER	LST °F
30	21	50	35.3	153.9	5.76	173.5	26.7	46.5	40.0	159.9	5.9	179.9	27.3	47.1	42.1	165.4	5.94	185.7	27.9	47.7
		70	52.3	185.8	6.22	207.0	29.8	49.7	57.9	193.1	6.3	214.7	30.5	50.4	60.5	199.8	6.42	221.7	31.1	51.1
		90	69.3	217.7	6.69	240.5	32.6	52.9	75.9	226.3	6.8	249.5	33.3	53.8	78.9	234.1	6.89	257.6	34.0	54.5
		110	86.2	249.6	7.15	274.0	34.9	56.1	93.8	259.5	7.3	284.2	35.7	57.1	97.2	268.4	7.37	293.5	36.4	58.0
	32	50	34.3	164.4	5.5	183.1	30.0	41.4	39.3	171.1	5.6	190.1	30.7	41.9	41.6	177.3	5.7	196.6	31.3	42.3
		70	51.1	198.7	5.93	218.9	33.5	43.7	57.1	206.7	6.0	227.3	34.3	44.2	59.8	214.0	6.11	234.9	35.0	44.7
		90	67.8	233.1	6.37	254.8	36.6	45.9	74.9	242.4	6.5	264.4	37.5	46.5	78.1	250.8	6.57	273.2	38.2	47.1
		110	84.5	267.4	6.8	290.7	39.3	48.2	92.6	278.0	6.9	301.6	40.2	48.8	96.3	287.6	7.0	311.5	41.0	49.5
	42	50	33.4	173.9	5.24	191.8	33.2	39.1	38.7	181.3	5.3	199.4	34.1	39.5	41.0	188.0	5.40	206.4	34.8	39.8
		70	50.0	210.5	5.66	229.8	37.2	40.9	56.3	219.1	5.8	238.8	38.1	41.4	59.2	227.0	5.83	246.9	38.9	41.8
		90	66.5	247.1	6.08	267.8	40.6	42.8	73.9	257.0	6.2	278.1	41.6	43.2	77.3	266.0	6.27	287.4	42.4	43.7
		110	83.0	283.7	6.50	305.8	43.6	44.6	91.6	294.8	6.6	317.4	44.6	45.1	95.5	305.0	6.70	327.9	45.5	45.6
50	21	50	36.4	143.2	7.49	168.8	19.1	66.1	40.7	148.9	7.6	174.9	19.6	66.7	42.7	154.0	7.73	180.4	19.9	67.2
		70	53.3	175.2	8.02	202.5	21.9	69.3	58.6	182.1	8.1	209.9	22.4	70.0	61.0	188.4	8.26	216.6	22.8	70.6
		90	70.3	207.2	8.54	236.3	24.3	72.5	76.5	215.3	8.7	244.9	24.8	73.3	79.4	222.7	8.80	252.8	25.3	74.1
		110	87.2	239.1	9.06	270.0	26.4	75.7	94.5	248.5	9.2	280.0	27.0	76.7	97.8	257.1	9.34	289.0	27.5	77.5
	32	50	35.5	151.8	7.2	176.2	21.2	61.0	40.1	158.0	7.3	182.8	21.7	61.4	42.2	163.7	7.4	188.8	22.2	61.8
		70	52.3	185.8	7.65	211.9	24.3	63.2	57.9	193.3	7.8	219.8	24.9	63.7	60.5	200.1	7.89	227.0	25.4	64.2
		90	69.1	219.9	8.15	247.7	27.0	65.5	75.7	228.6	8.3	256.9	27.6	66.1	78.7	236.6	8.40	265.2	28.2	66.6
		110	85.8	253.9	8.6	283.4	29.4	67.7	93.5	263.9	8.8	293.9	30.0	68.4	97.0	273.0	8.9	303.4	30.6	69.0
	42	50	34.8	159.6	6.84	182.9	23.3	58.7	39.6	166.3	6.9	190.1	23.9	59.1	41.8	172.5	7.05	196.6	24.5	59.4
		70	51.4	195.5	7.32	220.5	26.7	60.5	57.3	203.5	7.4	228.9	27.4	60.9	60.0	210.8	7.54	236.6	28.0	61.3
		90	68.0	231.4	7.79	258.0	29.7	62.3	75.0	240.7	7.9	267.7	30.4	62.7	78.1	249.2	8.03	276.6	31.0	63.2
		110	84.5	267.4	8.27	295.6	32.3	64.1	92.6	277.9	8.4	306.6	33.1	64.6	96.3	287.5	8.53	316.6	33.7	65.1
70	21	50	37.4	132.6	9.22	164.1	14.4	85.6	41.4	137.8	9.4	169.8	14.7	86.2	43.2	142.6	9.51	175.0	15.0	86.7
		70	54.3	164.6	9.81	198.1	16.8	88.9	59.3	171.1	10.0	205.1	17.2	89.5	61.6	177.0	10.11	211.5	17.5	90.1
		90	71.3	196.6	10.39	232.1	18.9	92.1	77.2	204.4	10.6	240.4	19.4	92.9	79.9	211.4	10.71	248.0	19.7	93.6
		110	Operation not recommended																	
	32	50	36.7	139.2	8.8	169.3	15.8	80.6	40.9	144.9	9.0	175.5	16.2	81.0	42.9	150.1	9.1	181.1	16.5	81.3
		70	53.5	172.9	9.37	204.9	18.5	82.8	58.8	179.9	9.52	212.4	18.9	83.3	61.1	186.2	9.66	219.2	19.3	83.7
		90	70.3	206.7	9.93	240.5	20.8	85.0	76.6	214.9	10.09	249.3	21.3	85.6	79.4	222.4	10.23	257.3	21.7	86.1
		110	Operation not recommended																	
	42	50	36.2	145.2	8.44	174.0	17.2	78.3	40.5	151.4	8.6	180.7	17.7	78.6	42.5	157.0	8.70	186.7	18.0	78.9
		70	52.8	180.5	8.97	211.1	20.1	80.1	58.3	187.9	9.1	219.0	20.6	80.4	60.7	194.7	9.25	226.2	21.0	80.8
		90	69.4	215.8	9.51	248.2	22.7	81.8	76.0	224.5	9.7	257.4	23.2	82.3	78.9	232.3	9.80	265.8	23.7	82.7
		110	Operation not recommended																	
90	21	50	38.4	122.0	10.96	159.3	11.1	105.2	42.1	126.8	11.1	164.8	11.4	105.7	43.8	131.1	11.30	169.7	11.6	106.2
		70	55.3	154.0	11.60	193.6	13.3	108.4	60.0	160.1	11.79	200.3	13.6	109.1	62.1	165.6	11.96	206.4	13.8	109.7
		90	72.3	186.1	12.24	227.8	15.2	111.7	77.9	193.4	12.44	235.9	15.5	112.5	80.5	200.1	12.62	243.1	15.8	113.2
		110	Operation not recommended																	
	32	50	37.9	126.6	10.5	162.4	12.1	100.1	41.8	131.8	10.6	168.2	12.4	100.5	43.5	136.6	10.8	173.4	12.6	100.8
		70	54.8	160.0	11.09	197.9	14.4	102.4	59.6	166.5	11.27	205.0	14.8	102.8	61.8	172.4	11.43	211.4	15.1	103.2
		90	71.6	193.5	11.71	233.4	16.5	104.6	77.4	201.2	11.90	241.7	16.9	105.1	80.1	208.2	12.07	249.3	17.2	105.6
		110	Operation not recommended																	
	42	50	37.5	130.9	10.04	165.1	13.0	97.9	41.5	136.4	10.2	171.3	13.4	98.2	43.3	141.5	10.35	176.8	13.7	98.4
		70	54.2	165.5	10.63	201.8	15.6	99.6	59.2	172.3	10.80	209.2	16.0	100.0	61.5	178.5	10.96	215.9	16.3	100.3
		90	70.9	200.2	11.22	238.5	17.8	101.4	77.0	208.2	11.40	247.1	18.3	101.8	79.7	215.5	11.57	255.0	18.6	102.1
		110	Operation not recommended																	
110	21	50	39.4	111.3	12.69	154.6	8.8	124.7	42.8	115.7	12.9	159.7	9.0	125.2	44.3	119.7	13.08	164.3	9.2	125.7
		70	56.3	143.4	13.39	189.1	10.7	128.0	60.7	149.1	13.61	195.5	11.0	128.6	62.7	154.2	13.81	201.3	11.2	129.2
		90	Operation not recommended																	
		110																		
	32	50	39.1	114.1	12.1	155.5	9.4	119.7	42.6	118.7	12.3	160.8	9.6	120.1	44.1	123.0	12.5	165.7	9.8	120.4
		70	56.0	147.2	12.81	190.9	11.5	121.9	60.4	153.1	13.02	197.5	11.8	122.3	62.5	158.5	13.21	203.5	12.0	122.7
		90	Operation not recommended																	
		110																		
	42	50	38.9	116.6	11.64	156.3	10.0	117.4	42.4	121.5	11.8	161.9	10.3	117.7	44.0	126.0	12.00	166.9	10.5	117.9
		70	55.7	150.6	12.29	192.5	12.3	119.2	60.2	156.7	12.49	199.3	12.6	119.5	62.3	162.3	12.67	205.6	12.8	119.8
		90	Operation not recommended																	
		110																		

NOTE: For part load application, divide capacity by 2.

2/15/10

The manufacturer works continually to improve its products. As a result, the design and specifications of each product at the time of order may be changed without notice. Purchaser's approval of this data set signifies that the equipment is acceptable under the provisions of the job specification. Statements and other information contained herein are not express warranties and do not form the basis of any bargain between the parties, but are merely the manufacturer's opinion or commendation of its products.

Contractor: _____ P.O.: _____

Engineer: _____

Project Name: _____ Unit Tag: _____

Aston Dual Hydronic Unit
8 - 15 Tons 60Hz

GEOSTAR

GTW150 - Performance Data

Heating Capacity

Source		Load Flow - 21 GPM							Load Flow - 32 GPM						Load Flow - 42 GPM					
EWT °F	Flow GPM	ELT °F	LLT °F	HC MBTUH	Power kW	HE MBTUH	COP	LST °F	LLT °F	HC MBTUH	Power kW	HE MBTUH	COP	LST °F	LLT °F	HC MBTUH	Power kW	HE MBTUH	COP	LST °F
30	32	60	72.6	132.7	7.7	106.4	5.0	19.9	68.4	133.8	7.6	107.9	5.2	23.3	66.4	134.7	7.4	109.3	5.3	24.8
		80	92.0	126.1	11.0	88.6	3.4	21.6	88.0	127.6	10.8	90.8	3.5	24.3	86.1	128.9	10.6	92.7	3.6	25.6
		100	111.4	119.6	14.3	70.9	2.5	23.2	107.6	121.4	14.0	73.6	2.5	25.4	105.9	123.0	13.7	76.1	2.6	26.4
		120	130.8	113.0	17.6	53.1	1.9	24.9	127.2	115.2	17.2	56.5	2.0	26.5	125.6	117.1	16.9	59.6	2.0	27.2
	42	60	72.9	135.9	7.8	109.4	5.1	19.6	68.6	137.0	7.6	111.0	5.3	23.1	66.6	138.0	7.5	112.4	5.4	24.6
		80	92.3	129.2	11.1	91.5	3.4	21.3	88.2	130.7	10.9	93.6	3.5	24.1	86.3	132.0	10.7	95.6	3.6	25.4
		100	111.7	122.5	14.4	73.5	2.5	23.0	107.8	124.3	14.1	76.3	2.6	25.2	106.0	126.0	13.8	78.8	2.7	26.2
		120	131.0	115.8	17.7	55.5	1.9	24.7	127.4	118.0	17.3	58.9	2.0	26.3	125.7	120.0	17.0	62.0	2.1	27.0
50	21	60	75.6	163.4	8.3	135.3	5.8	37.1	70.3	164.7	8.1	137.1	6.0	41.4	67.9	165.9	8.0	138.7	6.1	43.4
		80	94.9	156.0	11.2	117.8	4.1	38.8	89.9	157.8	11.0	120.3	4.2	42.5	87.6	159.4	10.8	122.6	4.3	44.2
		100	114.2	148.6	14.1	100.4	3.1	40.4	109.4	150.8	13.9	103.5	3.2	43.5	107.3	152.8	13.6	106.4	3.3	44.9
		120	133.4	141.2	17.1	82.9	2.4	42.1	129.0	143.9	16.7	86.8	2.5	44.6	127.0	146.3	16.4	90.3	2.6	45.7
	32	60	76.0	168.0	8.3	139.6	5.9	36.7	70.6	169.3	8.2	141.4	6.1	41.2	68.1	170.5	8.0	143.1	6.2	43.2
		80	95.3	160.3	11.3	121.8	4.2	38.4	90.1	162.1	11.1	124.4	4.3	42.2	87.8	163.8	10.9	126.7	4.4	44.0
		100	114.5	152.7	14.2	104.1	3.1	40.1	109.7	155.0	14.0	107.3	3.3	43.3	107.5	157.1	13.7	110.3	3.4	44.7
		120	133.8	145.1	17.2	86.4	2.5	41.8	129.2	147.8	16.9	90.3	2.6	44.4	127.2	150.3	16.5	93.9	2.7	45.5
	42	60	76.4	172.0	8.4	143.4	6.0	36.3	70.8	173.4	8.2	145.3	6.2	40.9	68.3	174.7	8.1	147.0	6.3	43.0
		80	95.6	164.2	11.4	125.5	4.2	38.1	90.4	166.1	11.2	128.0	4.4	42.0	88.0	167.8	11.0	130.4	4.5	43.8
		100	114.9	156.4	14.4	107.5	3.2	39.8	109.9	158.8	14.1	110.8	3.3	43.1	107.7	160.9	13.8	113.8	3.4	44.6
		120	134.2	148.6	17.3	89.5	2.5	41.5	129.5	151.4	17.0	93.5	2.6	44.2	127.3	154.0	16.7	97.1	2.7	45.4
70	21	60	78.8	197.8	8.9	167.5	6.5	54.0	72.5	199.3	8.7	169.6	6.7	59.4	69.6	200.8	8.6	171.5	6.9	61.8
		80	98.0	189.3	11.5	150.1	4.8	55.7	92.0	191.4	11.3	153.0	5.0	60.4	89.2	193.4	11.1	155.6	5.1	62.6
		100	117.2	180.8	14.1	132.7	3.8	57.4	111.5	183.5	13.8	136.3	3.9	61.5	108.9	186.0	13.6	139.6	4.0	63.4
		120	136.4	172.3	16.7	115.3	3.0	59.0	131.0	175.6	16.4	119.7	3.1	62.5	128.5	178.6	16.1	123.7	3.3	64.1
	32	60	79.4	203.2	8.9	172.7	6.7	53.6	72.8	204.8	8.8	174.9	6.8	59.1	69.8	206.3	8.6	176.8	7.0	61.6
		80	98.5	194.5	11.6	155.0	4.9	55.2	92.3	196.7	11.4	157.9	5.1	60.1	89.5	198.7	11.2	160.6	5.2	62.4
		100	117.7	185.8	14.2	137.3	3.8	56.9	111.8	188.6	13.9	141.0	4.0	61.2	109.1	191.1	13.7	144.4	4.1	63.1
		120	136.9	177.1	16.9	119.6	3.1	58.6	131.3	180.5	16.5	124.1	3.2	62.2	128.7	183.5	16.2	128.2	3.3	63.9
	42	60	79.8	208.2	9.0	177.4	6.8	53.1	73.1	209.8	8.8	179.6	7.0	58.8	70.1	211.3	8.7	181.6	7.1	61.4
		80	99.0	199.2	11.7	159.4	5.0	54.8	92.6	201.5	11.4	162.5	5.2	59.8	89.7	203.6	11.2	165.2	5.3	62.1
		100	118.1	190.3	14.3	141.5	3.9	56.5	112.1	193.2	14.0	145.3	4.0	60.9	109.3	195.8	13.8	148.7	4.2	62.9
		120	137.3	181.4	17.0	123.5	3.1	58.2	131.6	184.9	16.6	128.1	3.3	62.0	129.0	188.0	16.3	132.3	3.4	63.7
90	21	60	82.1	232.1	9.5	199.7	7.2	71.0	74.6	233.9	9.3	202.1	7.4	77.4	71.2	235.6	9.2	204.3	7.5	80.3
		80	101.2	222.6	11.8	182.3	5.5	72.6	94.1	225.1	11.6	185.6	5.7	78.4	90.8	227.4	11.4	188.6	5.9	81.0
		100	Operation not recommended																	
		120																		
	32	60	82.7	238.5	9.6	205.9	7.3	70.4	75.0	240.4	9.4	208.3	7.5	77.0	71.5	242.1	9.2	210.6	7.7	80.0
		80	101.8	228.7	11.9	188.2	5.6	72.1	94.5	231.3	11.7	191.5	5.8	78.0	91.1	233.6	11.5	194.6	6.0	80.7
		100	120.8	218.9	14.2	170.5	4.5	73.8	113.9	222.2	13.9	174.7	4.7	79.1	110.7	225.2	13.7	178.5	4.8	81.5
		120	Operation not recommended																	
	42	60	83.3	244.3	9.6	211.4	7.4	69.9	75.4	246.2	9.5	214.0	7.6	76.6	71.8	248.0	9.3	216.3	7.8	79.7
		80	102.3	234.3	12.0	193.4	5.7	71.6	94.8	236.9	11.7	196.9	5.9	77.7	91.4	239.3	11.5	200.0	6.1	80.5
		100	121.4	224.2	14.3	175.4	4.6	73.3	114.2	227.6	14.0	179.8	4.8	78.8	111.0	230.7	13.8	183.7	4.9	81.3
		120	Operation not recommended																	

NOTE: For part load application, divide capacity by 2.

2/15/10

The manufacturer works continually to improve its products. As a result, the design and specifications of each product at the time of order may be changed without notice. Purchaser's approval of this data set signifies that the equipment is acceptable under the provisions of the job specification. Statements and other information contained herein are not express warranties and do not form the basis of any bargain between the parties, but are merely the manufacturer's opinion or commendation of its products.

Contractor: _____ P.O.: _____

Engineer: _____

Project Name: _____ Unit Tag: _____

Aston Dual Hydronic Unit
8 - 15 Tons 60Hz

GEOSTAR

GTW180 - Performance Data

Cooling Capacity

Source		Load Flow - 24 GPM							Load Flow - 36 GPM						Load Flow - 48 GPM					
EST °F	Flow GPM	ELT °F	LLT °F	TC MBTUH	Power kW	HR MBTUH	EER	LST °F	LLT °F	TC MBTUH	Power kW	HR MBTUH	EER	LST °F	LLT °F	TC MBTUH	Power kW	HR MBTUH	EER	LST °F
30	24	50	35.5	173.5	6.83	196.8	25.4	46.4	40.0	180.0	6.9	203.7	26.0	47.0	42.2	186.6	7.04	210.6	26.5	47.5
		70	52.4	211.1	7.58	237.0	27.9	49.7	57.8	219.1	7.7	245.3	28.5	50.4	60.5	227.0	7.81	253.7	29.1	51.1
		90	69.3	248.8	8.32	277.2	29.9	53.1	75.7	258.2	8.5	287.0	30.5	53.9	78.9	267.5	8.58	296.8	31.2	54.7
		110	86.1	286.4	9.07	317.4	31.6	56.4	93.5	297.2	9.2	328.6	32.3	57.4	97.2	308.0	9.35	339.9	32.9	58.3
	36	50	34.6	184.8	6.5	207.0	28.4	41.5	39.3	192.0	6.6	214.6	29.0	41.9	41.7	199.3	6.7	222.2	29.7	42.3
		70	51.2	225.2	7.23	249.9	31.1	43.9	57.0	233.9	7.3	258.9	31.8	44.4	59.9	242.5	7.46	268.0	32.5	44.9
		90	67.9	265.6	7.94	292.7	33.4	46.3	74.7	275.7	8.1	303.2	34.2	46.8	78.1	285.8	8.19	313.7	34.9	47.4
		110	84.5	306.0	8.7	335.5	35.3	48.6	92.4	317.5	8.8	347.5	36.1	49.3	96.3	329.0	8.9	359.5	36.9	50.0
	48	50	33.7	196.1	6.21	217.3	31.6	39.1	38.7	204.1	6.3	225.6	32.4	39.4	41.2	212.0	6.40	233.8	33.1	39.7
		70	50.1	239.2	6.89	262.7	34.7	40.9	56.2	248.6	7.0	272.5	35.5	41.4	59.3	258.0	7.10	282.2	36.3	41.8
		90	66.5	282.4	7.57	308.2	37.3	42.8	73.7	293.2	7.7	319.4	38.2	43.3	77.3	304.0	7.80	330.6	39.0	43.8
		110	82.9	325.5	8.25	353.6	39.5	44.7	91.2	337.8	8.4	366.3	40.3	45.3	95.4	350.0	8.50	379.0	41.2	45.8
50	24	50	36.5	162.2	9.03	193.0	18.0	66.1	40.6	168.3	9.2	199.6	18.3	66.6	42.7	174.4	9.31	206.2	18.7	67.2
		70	53.7	195.9	9.83	229.5	19.9	69.1	58.7	203.3	10.0	237.4	20.4	69.8	61.2	210.7	10.14	245.3	20.8	70.4
		90	70.9	229.7	10.63	265.9	21.6	72.2	76.8	238.3	10.8	275.2	22.1	72.9	79.7	247.0	10.96	284.4	22.5	73.7
		110	88.0	263.4	11.43	302.4	23.1	75.2	94.8	273.3	11.6	312.9	23.6	76.1	98.2	283.3	11.78	323.4	24.0	77.0
	36	50	35.7	171.4	8.6	200.9	19.8	61.2	40.1	178.1	8.8	208.1	20.3	61.6	42.3	184.9	8.9	215.2	20.8	62.0
		70	52.7	207.4	9.40	239.5	22.1	63.3	58.0	215.4	9.5	248.0	22.6	63.8	60.7	223.4	9.69	256.4	23.0	64.2
		90	69.7	243.4	10.16	278.1	23.9	65.4	76.0	252.6	10.3	287.8	24.5	66.0	79.1	261.9	10.48	297.6	25.0	66.5
		110	86.7	279.3	10.9	316.6	25.6	67.6	93.9	289.9	11.1	327.7	26.1	68.2	97.5	300.4	11.3	338.8	26.7	68.8
	48	50	34.9	180.7	8.25	208.8	21.9	58.7	39.6	188.0	8.4	216.5	22.5	59.0	41.9	195.3	8.50	224.3	23.0	59.3
		70	51.8	218.9	8.97	249.5	24.4	60.4	57.4	227.4	9.1	258.5	25.0	60.8	60.2	236.0	9.25	267.6	25.5	61.1
		90	68.6	257.1	9.70	290.2	26.5	62.1	75.2	266.9	9.9	300.5	27.1	62.5	78.5	276.8	10.00	310.9	27.7	63.0
		110	85.4	295.3	10.43	330.9	28.3	63.8	93.0	306.4	10.6	342.5	28.9	64.3	96.8	317.5	10.75	354.2	29.5	64.8
70	24	50	37.4	150.9	11.24	189.2	13.4	85.8	41.3	156.6	11.4	195.5	13.7	86.3	43.2	162.3	11.59	201.8	14.0	86.8
		70	54.9	180.7	12.09	222.0	15.0	88.5	59.6	187.5	12.3	229.4	15.3	89.1	61.9	194.3	12.46	236.9	15.6	89.7
		90	72.5	210.6	12.94	254.7	16.3	91.2	77.9	218.5	13.1	263.3	16.6	91.9	80.6	226.4	13.34	271.9	17.0	92.7
		110	Operation not recommended																	
	36	50	36.8	158.0	10.8	194.8	14.7	80.8	40.9	164.2	10.9	201.5	15.0	81.2	42.9	170.4	11.1	208.3	15.4	81.6
		70	54.2	189.6	11.57	229.1	16.4	82.7	59.1	196.9	11.75	237.0	16.8	83.2	61.5	204.2	11.93	244.9	17.1	83.6
		90	71.6	221.2	12.39	263.4	17.9	84.6	77.2	229.6	12.58	272.5	18.3	85.1	80.1	238.0	12.77	281.5	18.6	85.6
		110	Operation not recommended																	
	48	50	36.2	165.2	10.28	200.3	16.1	78.3	40.4	171.9	10.4	207.5	16.5	78.6	42.6	178.6	10.60	214.8	16.8	78.9
		70	53.5	198.5	11.06	236.2	17.9	79.8	58.5	206.3	11.2	244.6	18.4	80.2	61.1	214.1	11.40	253.0	18.8	80.5
		90	70.7	231.8	11.83	272.1	19.6	81.3	76.6	240.7	12.0	281.7	20.0	81.7	79.6	249.5	12.20	291.2	20.5	82.1
		110	Operation not recommended																	
90	24	50	38.4	139.6	13.44	185.5	10.4	105.5	42.0	144.8	13.7	191.4	10.6	106.0	43.7	150.1	13.86	197.4	10.8	106.4
		70	56.2	165.5	14.34	214.5	11.5	107.9	60.5	171.8	14.57	221.4	11.8	108.5	62.6	178.0	14.79	228.4	12.0	109.0
		90	74.0	191.5	15.24	243.5	12.6	110.3	79.0	198.7	15.48	251.5	12.8	111.0	81.4	205.9	15.72	259.5	13.1	111.6
		110	Operation not recommended																	
	36	50	37.9	144.7	12.9	188.6	11.2	100.5	41.6	150.3	13.1	195.0	11.5	100.8	43.5	156.0	13.3	201.3	11.7	101.2
		70	55.7	171.8	13.74	218.7	12.5	102.2	60.1	178.4	13.96	226.0	12.8	102.6	62.3	185.0	14.17	233.4	13.1	103.0
		90	73.4	199.0	14.61	248.8	13.6	103.8	78.5	206.5	14.83	257.1	13.9	104.3	81.1	214.1	15.06	265.5	14.2	104.7
		110	Operation not recommended																	
	48	50	37.5	149.8	12.32	191.8	12.2	98.0	41.3	155.8	12.5	198.5	12.5	98.3	43.3	161.9	12.70	205.2	12.7	98.6
		70	55.2	178.1	13.14	223.0	13.6	99.3	59.7	185.1	13.35	230.6	13.9	99.6	62.0	192.1	13.55	238.3	14.2	99.9
		90	72.8	206.5	13.97	254.1	14.8	100.6	78.1	214.4	14.18	262.8	15.1	100.9	80.7	222.3	14.40	271.4	15.4	101.3
		110	Operation not recommended																	
110	24	50	39.3	128.3	15.65	181.7	8.2	125.1	42.6	133.1	15.9	187.3	8.4	125.6	44.3	137.9	16.13	193.0	8.6	126.1
		70	57.5	150.3	16.60	207.0	9.1	127.2	61.3	156.0	16.86	213.5	9.3	127.8	63.3	161.6	17.11	220.0	9.4	128.3
		90	Operation not recommended																	
		110																		
	36	50	39.1	131.3	15.0	182.5	8.8	120.1	42.4	136.4	15.2	188.4	9.0	120.5	44.1	141.6	15.5	194.3	9.2	120.8
		70	57.2	154.0	15.91	208.3	9.7	121.6	61.1	160.0	16.16	215.1	9.9	121.9	63.1	165.9	16.41	221.9	10.1	122.3
		90	Operation not recommended																	
		110																		
	48	50	38.8	134.3	14.36	183.3	9.4	117.6	42.2	139.8	14.6	189.5	9.6	117.9	44.0	145.2	14.80	195.7	9.8	118.2
		70	56.9	157.7	15.23	209.7	10.4	118.7	60.9	163.9	15.46	216.7	10.6	119.0	62.9	170.1	15.70	223.7	10.8	119.3
		90	Operation not recommended																	
		110																		

NOTE: For part load application, divide capacity by 2.

2/15/10

The manufacturer works continually to improve its products. As a result, the design and specifications of each product at the time of order may be changed without notice. Purchaser's approval of this data set signifies that the equipment is acceptable under the provisions of the job specification. Statements and other information contained herein are not express warranties and do not form the basis of any bargain between the parties, but are merely the manufacturer's opinion or commendation of its products.

Contractor: _____ P.O.: _____

Engineer: _____

Project Name: _____ Unit Tag: _____

Aston Dual Hydronic Unit
8 - 15 Tons 60Hz

GEOSTAR

GTW180 - Performance Data

Heating Capacity

Source		Load Flow - 24 GPM							Load Flow - 36 GPM						Load Flow - 48 GPM					
EWT °F	Flow GPM	ELT °F	LLT °F	HC MBTUH	Power kW	HE MBTUH	COP	LST °F	LLT °F	HC MBTUH	Power kW	HE MBTUH	COP	LST °F	LLT °F	HC MBTUH	Power kW	HE MBTUH	COP	LST °F
30	36	60	72.7	152.0	9.7	119.1	4.6	20.1	68.5	153.2	9.5	120.8	4.7	23.3	66.4	154.3	9.3	122.5	4.8	24.9
		80	92.0	143.7	12.6	100.6	3.3	21.6	88.1	145.2	12.4	102.9	3.4	24.3	86.1	146.8	12.2	105.2	3.5	25.6
		100	111.3	135.4	15.6	82.1	2.5	23.2	107.6	137.3	15.3	85.0	2.6	25.3	105.8	139.2	15.0	87.9	2.7	26.3
		120	130.6	127.0	18.6	63.6	2.0	24.7	127.2	129.3	18.2	67.1	2.1	26.3	125.5	131.6	17.9	70.7	2.2	27.1
	48	60	73.0	155.9	9.7	122.7	4.7	19.8	68.7	157.1	9.6	124.5	4.8	23.1	66.6	158.3	9.4	126.2	4.9	24.7
		80	92.3	147.4	12.7	104.0	3.4	21.3	88.3	149.0	12.5	106.3	3.5	24.1	86.3	150.5	12.3	108.7	3.6	25.5
		100	111.6	138.8	15.7	85.2	2.6	22.9	107.8	140.8	15.4	88.2	2.7	25.1	105.9	142.8	15.1	91.1	2.8	26.2
		120	130.9	130.3	18.7	66.4	2.0	24.5	127.4	132.6	18.4	70.0	2.1	26.1	125.6	135.0	18.0	73.6	2.2	26.9
50	24	60	75.6	187.3	10.1	152.8	5.4	37.3	70.5	188.8	10.0	154.8	5.6	41.4	67.9	190.2	9.8	156.8	5.7	43.5
		80	94.8	177.3	13.1	132.6	4.0	39.0	90.0	179.3	12.9	135.3	4.1	42.5	87.5	181.2	12.7	138.0	4.2	44.3
		100	113.9	167.4	16.1	112.3	3.0	40.6	109.4	169.7	15.8	115.8	3.1	43.6	107.2	172.1	15.5	119.2	3.3	45.0
		120	133.1	157.4	19.1	92.1	2.4	42.3	128.9	160.2	18.8	96.2	2.5	44.7	126.8	163.1	18.4	100.3	2.6	45.8
	36	60	76.0	192.3	10.2	157.5	5.5	36.9	70.8	193.7	10.0	159.5	5.7	41.1	68.1	195.2	9.9	161.6	5.8	43.3
		80	95.2	182.0	13.2	136.9	4.0	38.6	90.2	184.0	13.0	139.7	4.2	42.2	87.7	185.9	12.7	142.4	4.3	44.1
		100	114.3	171.8	16.2	116.3	3.1	40.3	109.7	174.2	15.9	119.8	3.2	43.3	107.4	176.6	15.6	123.3	3.3	44.9
		120	133.5	161.5	19.3	95.8	2.5	42.0	129.1	164.4	18.9	100.0	2.6	44.4	127.0	167.4	18.5	104.2	2.6	45.7
	48	60	76.4	197.2	10.3	162.1	5.6	36.5	71.0	198.7	10.1	164.2	5.8	40.9	68.3	200.2	9.9	166.3	5.9	43.1
		80	95.6	186.7	13.3	141.2	4.1	38.2	90.5	188.7	13.1	144.0	4.2	42.0	87.9	190.7	12.8	146.9	4.4	43.9
		100	114.7	176.2	16.4	120.3	3.2	40.0	109.9	178.7	16.1	123.9	3.3	43.1	107.5	181.2	15.8	127.4	3.4	44.7
		120	133.8	165.7	19.4	99.4	2.5	41.7	129.4	168.7	19.0	103.7	2.6	44.2	127.2	171.7	18.7	108.0	2.7	45.5
70	24	60	78.9	226.5	10.7	190.1	6.2	54.2	72.7	228.3	10.5	192.5	6.4	59.3	69.6	230.0	10.3	194.8	6.5	61.9
		80	97.9	214.7	13.7	167.9	4.6	56.0	92.1	217.0	13.5	171.0	4.7	60.5	89.1	219.3	13.2	174.2	4.9	62.7
		100	116.9	202.8	16.8	145.7	3.5	57.9	111.4	205.7	16.4	149.6	3.7	61.7	108.7	208.6	16.1	153.6	3.8	63.6
		120	135.9	191.0	19.8	123.4	2.8	59.7	130.8	194.5	19.4	128.2	2.9	62.9	128.2	197.9	19.0	132.9	3.0	64.5
	36	60	79.4	232.5	10.8	195.8	6.3	53.7	73.0	234.3	10.6	198.2	6.5	59.0	69.8	236.0	10.4	200.6	6.7	61.6
		80	98.4	220.3	13.8	173.2	4.7	55.6	92.4	222.7	13.6	176.4	4.8	60.2	89.4	225.1	13.3	179.6	5.0	62.5
		100	117.3	208.2	16.9	150.6	3.6	57.5	111.7	211.1	16.6	154.6	3.7	61.4	108.9	214.1	16.3	158.6	3.9	63.4
		120	136.3	196.0	20.0	127.9	2.9	59.3	131.1	199.6	19.6	132.8	3.0	62.6	128.5	203.1	19.2	137.7	3.1	64.3
	48	60	79.9	238.5	10.8	201.5	6.5	53.2	73.3	240.3	10.6	203.9	6.6	58.7	70.1	242.1	10.5	206.4	6.8	61.4
		80	98.8	226.0	13.9	178.5	4.8	55.1	92.7	228.4	13.7	181.8	4.9	59.9	89.6	230.8	13.4	185.0	5.0	62.3
		100	117.8	213.5	17.0	155.5	3.7	57.0	112.0	216.6	16.7	159.6	3.8	61.1	109.1	219.6	16.4	163.7	3.9	63.2
		120	136.8	201.0	20.1	132.4	2.9	59.0	131.4	204.7	19.7	137.4	3.0	62.4	128.7	208.3	19.3	142.4	3.2	64.1
90	24	60	82.1	265.8	11.2	227.5	6.9	71.0	74.9	267.8	11.0	230.2	7.1	77.2	71.2	269.8	10.8	232.8	7.3	80.3
		80	101.0	252.0	14.3	203.2	5.2	73.1	94.2	254.7	14.0	206.8	5.3	78.5	90.7	257.5	13.8	210.4	5.5	81.2
		100	Operation not recommended																	
		120																		
	36	60	82.7	272.7	11.3	234.2	7.1	70.5	75.3	274.8	11.1	236.9	7.3	76.8	71.5	276.9	10.9	239.6	7.4	80.0
		80	101.6	258.7	14.4	209.5	5.3	72.5	94.5	261.4	14.2	213.2	5.4	78.2	91.0	264.2	13.9	216.8	5.6	81.0
		100	120.4	244.6	17.5	184.8	4.1	74.6	113.8	248.1	17.2	189.4	4.2	79.5	110.5	251.6	16.9	194.0	4.4	81.9
		120	Operation not recommended																	
	48	60	83.3	279.7	11.4	240.9	7.2	69.9	75.7	281.9	11.2	243.7	7.4	76.5	71.8	284.0	11.0	246.5	7.6	79.7
		80	102.1	265.3	14.5	215.7	5.4	72.0	94.9	268.2	14.3	219.5	5.5	77.8	91.3	271.0	14.0	223.2	5.7	80.7
		100	120.9	250.9	17.7	190.6	4.2	74.1	114.1	254.4	17.3	195.3	4.3	79.2	110.8	258.0	17.0	200.0	4.4	81.7
		120	Operation not recommended																	

NOTE: For part load application, divide capacity by 2.

2/15/10

The manufacturer works continually to improve its products. As a result, the design and specifications of each product at the time of order may be changed without notice. Purchaser's approval of this data set signifies that the equipment is acceptable under the provisions of the job specification. Statements and other information contained herein are not express warranties and do not form the basis of any bargain between the parties, but are merely the manufacturer's opinion or commendation of its products.

Contractor: _____ P.O.: _____

Engineer: _____

Project Name: _____ Unit Tag: _____

Aston Dual Hydronic Unit
8 - 15 Tons 60Hz

GEOSTAR

Wiring Schematics

208-230/60/1

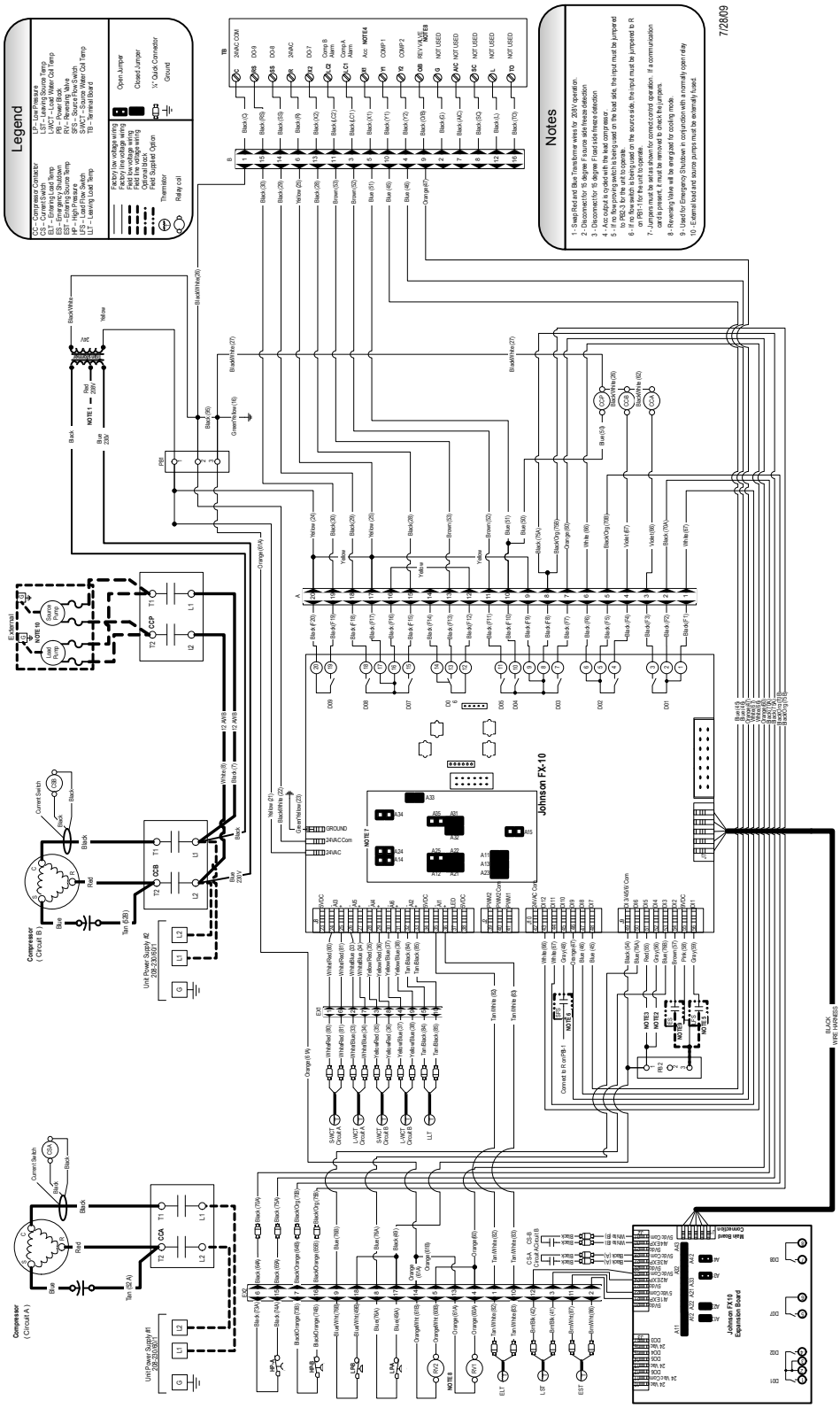

The manufacturer works continually to improve its products. As a result, the design and specifications of each product at the time of order may be changed without notice. Purchaser's approval of this data set signifies that the equipment is acceptable under the provisions of the job specification. Statements and other information contained herein are not express warranties and do not form the basis of any bargain between the parties, but are merely the manufacturer's opinion or commendation of its products.

Contractor: _____ P.O.: _____

Engineer: _____

Project Name: _____ Unit Tag: _____

Aston Dual Hydronic Unit
8 - 15 Tons 60Hz

GEOSTAR

Wiring Schematics cont.

208-230/60/1 with GeoStart Option

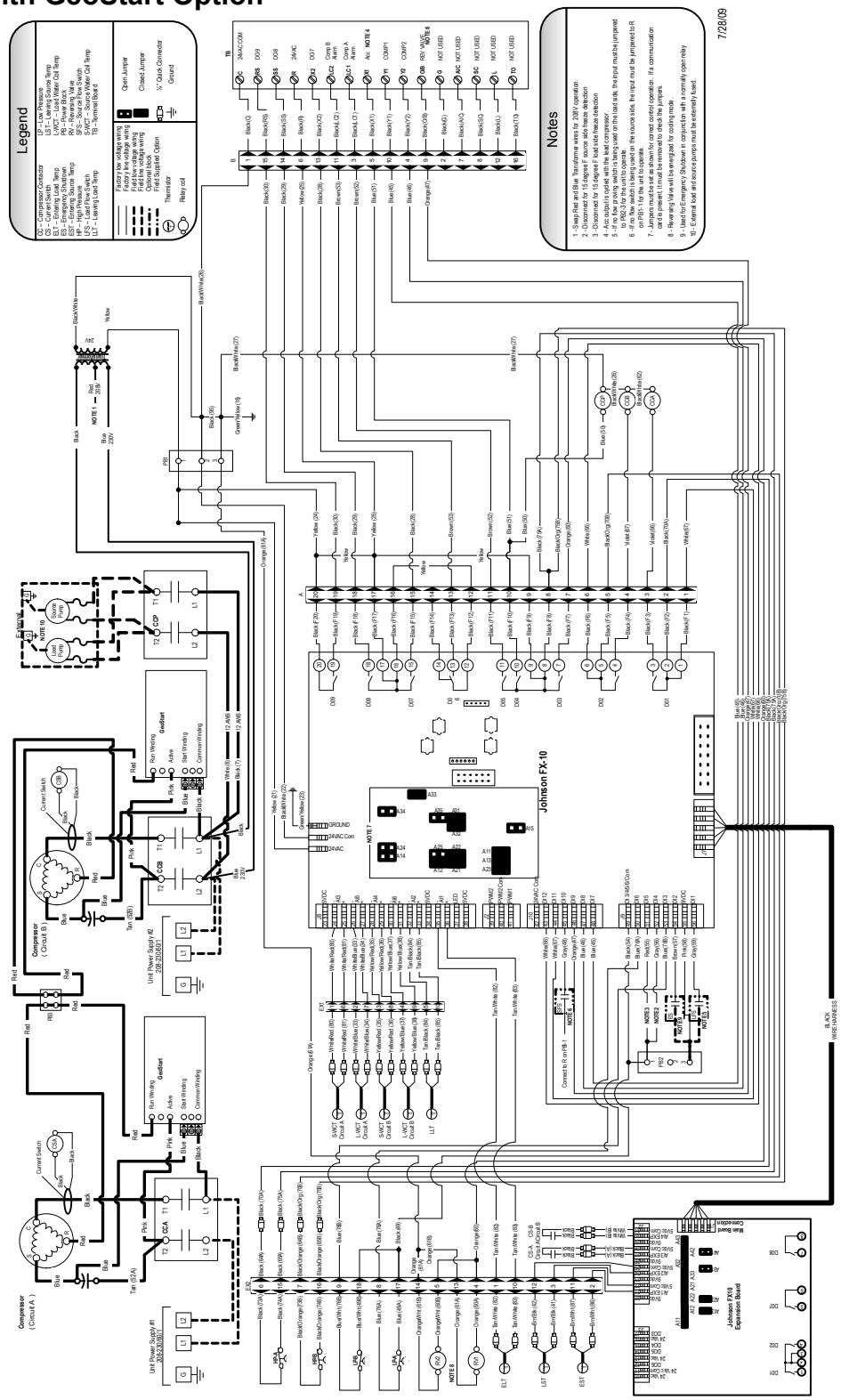

The manufacturer works continually to improve its products. As a result, the design and specifications of each product at the time of order may be changed without notice. Purchaser's approval of this data set signifies that the equipment is acceptable under the provisions of the job specification. Statements and other information contained herein are not express warranties and do not form the basis of any bargain between the parties, but are merely the manufacturer's opinion or commendation of its products.

Contractor: _____ P.O.: _____

Engineer: _____

Project Name: _____ Unit Tag: _____

Aston Dual Hydronic Unit
8 - 15 Tons 60Hz

GEOSTAR

Wiring Schematics cont.

460/60/3

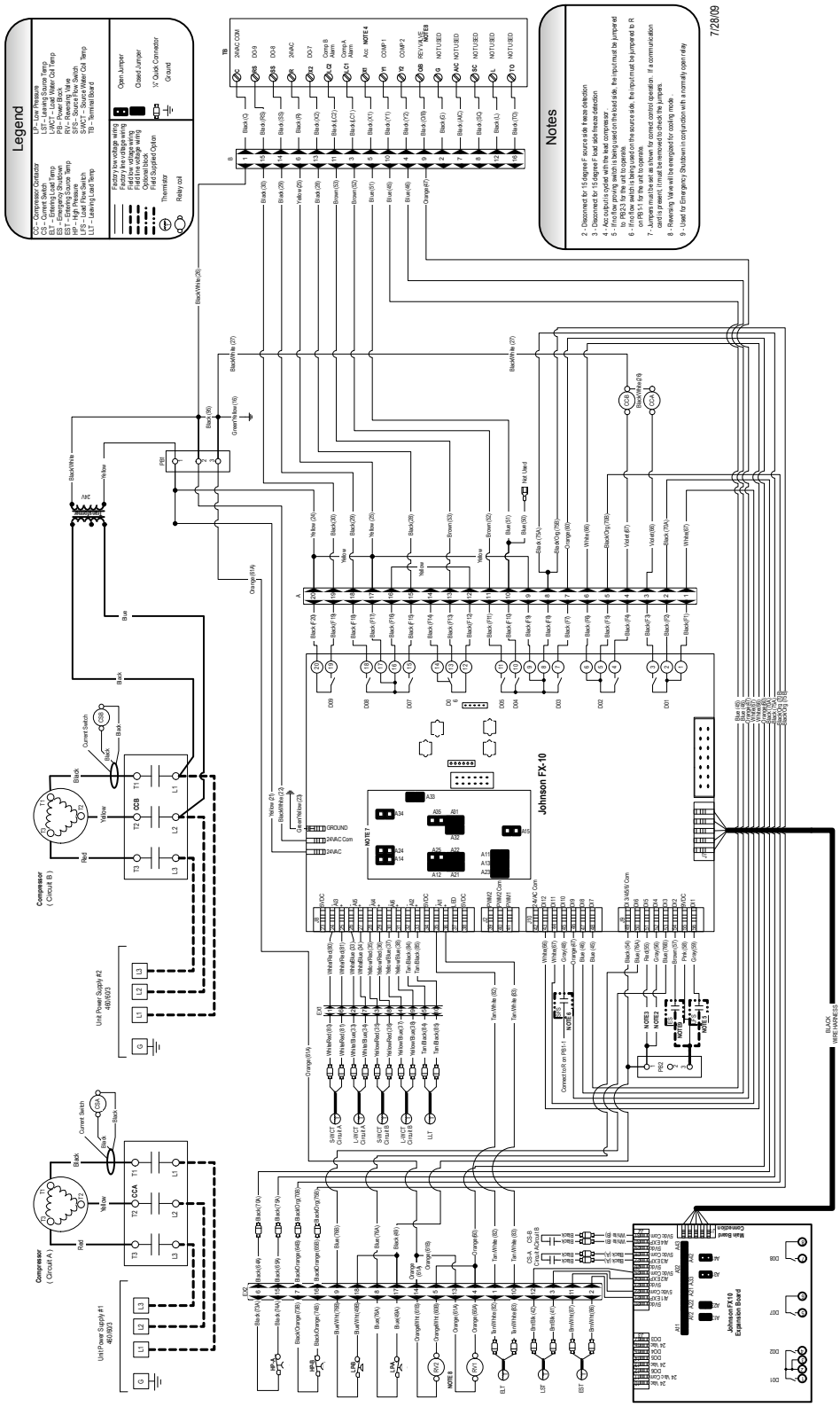

The manufacturer works continually to improve its products. As a result, the design and specifications of each product at the time of order may be changed without notice. Purchaser's approval of this data set signifies that the equipment is acceptable under the provisions of the job specification. Statements and other information contained herein are not express warranties and do not form the basis of any bargain between the parties, but are merely the manufacturer's opinion or commendation of its products.

Contractor: _____ P.O.: _____

Engineer: _____

Project Name: _____ Unit Tag: _____

Aston Dual Hydronic Unit
8 - 15 Tons 60Hz

GEOSTAR

Wiring Schematics cont.

MUI Wiring Diagram

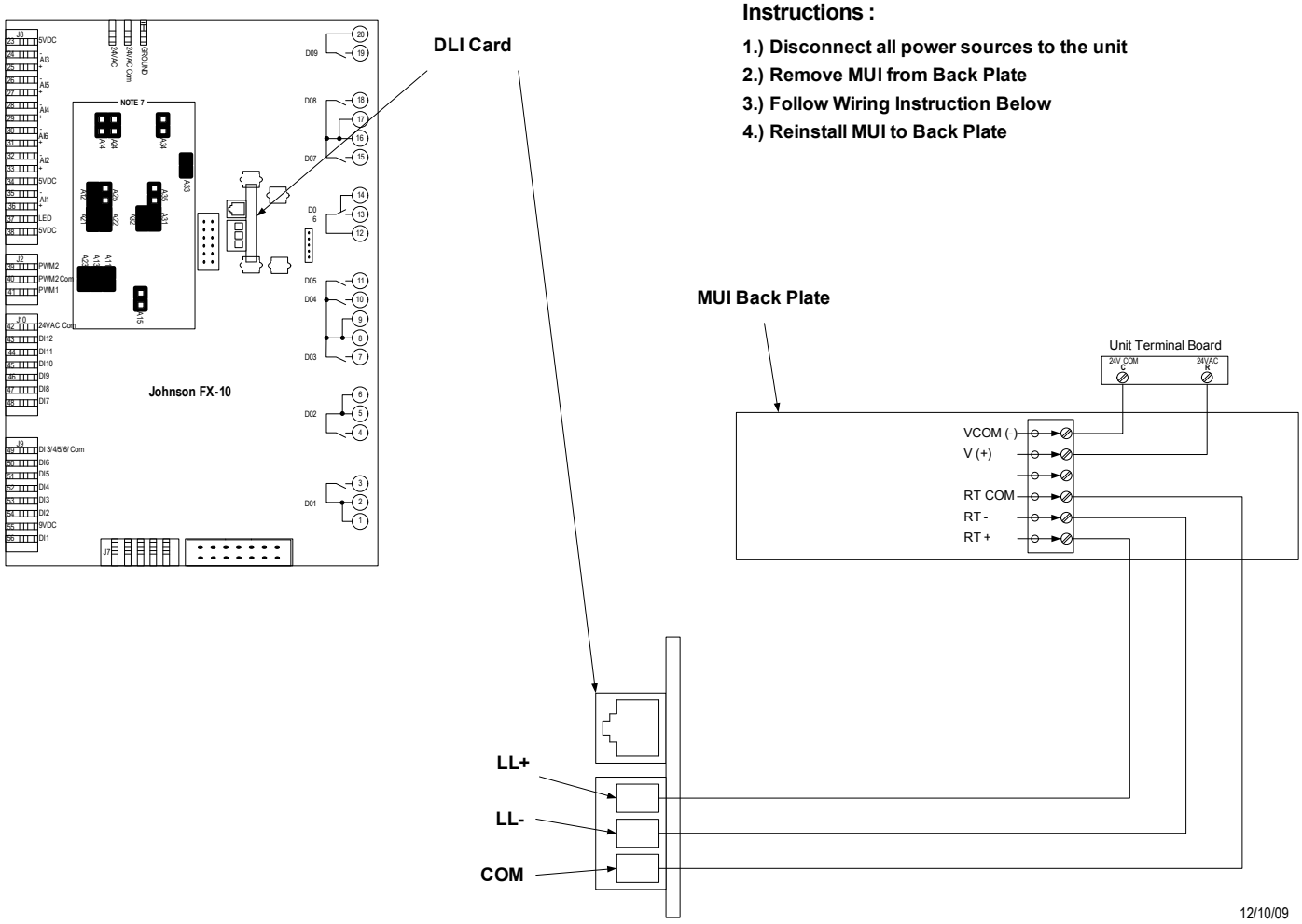

Instructions :

1.) Disconnect all power sources to the unit
2.) Remove MUI from Back Plate
3.) Follow Wiring Instruction Below
4.) Reinstall MUI to Back Plate

The manufacturer works continually to improve its products. As a result, the design and specifications of each product at the time of order may be changed without notice. Purchaser's approval of this data set signifies that the equipment is acceptable under the provisions of the job specification. Statements and other information contained herein are not express warranties and do not form the basis of any bargain between the parties, but are merely the manufacturer's opinion or commendation of its products.

Contractor: _____ P.O.: _____

Engineer: _____

Project Name: _____ Unit Tag: _____

Aston Dual Hydronic Unit
8 - 15 Tons 60Hz

Engineering Guide Specifications

General

The liquid source water-to-water heat pump shall be a single packaged reverse-cycle heating/cooling unit. The unit shall be listed by a nationally recognized safety-testing laboratory or agency, such as ETL Testing Laboratory, Underwriters Laboratory (UL), or Canadian Standards Association (CSA). The unit shall be rated in accordance with Air Conditioning, Heating, and Refrigeration Institute/International Standards Organization (AHRI/ ISO) and Canadian Standards Association (CSA-US). The liquid source water-to-water heat pump unit shall be designed to operate with source liquid temperatures between 30°F [1.1°C] and 110°F [43.3°C] in cooling, and between 20°F [-6.7°C] and 90°F [32.2°C] in heating.

Casing and Cabinet

The cabinet shall be fabricated from heavy-gauge galvanized steel and finished with corrosion-resistant powder coating. This corrosion protection system shall meet the stringent 1,000 hour salt spray test per ASTM B117. The interior shall be insulated with 1/2″ thick, multi-density, coated glass fiber for noise suppression.

The control box shall have separate holes and knockouts for entrance of line voltage and low voltage control wiring. All factory-installed wiring passing through factory knockouts and openings shall be protected from sheet metal edges at openings by plastic ferrules. The control box shall be field switchable from front to back for improved application flexibility with quick attach low voltage harnesses. The control box is shipped standard on the opposite end of the water connections.

Refrigerant Circuit

All units shall contain two (2) sealed refrigerant circuits, each containing a hermetic motor scroll compressor, bidirectional thermal expansion valve assemblies, reversing valve, braze plate heat exchangers, factory installed high and low pressure safety switches, freeze detection, service ports, and liquid line filter dryers. Compressors shall be scroll types designed for heat pump duty with internal isolation and mounted on rubber vibration isolators. Compressor motors shall have internal overload protection. A high density sound attenuating blanket shall be factory installed around the compressor to reduce sound. The water to refrigerant heat exchangers shall be interlaced copper brazed, 316 stainless plate steel, capable of withstanding 650 psig [4489 kPa] working pressure on the refrigerant side and 450 psig [3108 kPa] on the water side. The thermal expansion valve assembly shall provide proper superheat over the liquid temperature range with minimal “hunting.” The assembly shall operate bidirectionally without the use of check valves. Externally mounted pressure controlled water regulating flow valves are not acceptable.

Piping and Connections

Supply and return water connections shall be 2 in. [50.8 mm] FPT copper fittings fixed to the cabinet by use of a captive fitting, which eliminates the need for backup pipe wrenches.

Optional Back/Top Mount Water Connections - shall be factory installed to the back corner post or top panel by use of a captive fitting, which eliminates the need for backup pipe wrenches.

WARNING: Warranty is void if strainers are not used on the entering side of the load and source.

Electrical

Controls and safety devices will be factory wired and mounted within the unit. Controls shall include 24 Volt activated compressor contactors, 24VAC-75VA transformer with built in circuit breaker, reversing valve coils, and anti short-cycle protection. A terminal block with screw in terminals will be provided for field control wiring. To prevent short cycling when the safety controls are activated, the reset relay shall provide a lockout circuit that requires resetting of low voltage supply or main circuit breaker. A lockout signal shall be provided to the display to indicate a lockout situation. Units shall be name-plated for use with time delay fuses or HACR circuit breakers. Unit controls shall be 24 Volt and provide heating or cooling as required by the remote thermostat/ sensor.

Optional GeoStart™ (Compressor Soft Starter) - shall be factory installed for use in applications that require low starting amps, reduced compressor start-up noise, off-grid, and improved start-up behavior. GeoStart shall reduce normal starting current by 60% on 208/60/1 units.

Microprocessor Control

The unit shall be controlled using an FX10 microprocessor which sequences all functions and modes of operations. The control shall interface with a (Y,B) thermostat, mechanical or electronic. The control shall have the ability to communicate with N2 Open, BacNet, or LonWorks protocols with optional communication card. The control system shall have the following features:

1. Anti-short cycle time delay on compressor operation, time delay shall be a minimum of 3 minutes
2. Random start on power up mode
3. Low voltage protection
4. High voltage protection
5. Unit shutdown on high or low refrigerant pressures
6. Unit shutdown for low water temperature
7. Source and Load heat exchanger low water temperature cutout selectable for water or anti-freeze

The manufacturer works continually to improve its products. As a result, the design and specifications of each product at the time of order may be changed without notice. Purchaser’s approval of this data set signifies that the equipment is acceptable under the provisions of the job specification. Statements and other information contained herein are not express warranties and do not form the basis of any bargain between the parties, but are merely the manufacturer’s opinion or commendation of its products.

Engineering Guide Specifications cont.

8. Automatic intelligent reset (Unit will automatically reset 5 minutes after trip if the fault has cleared. Should a fault reoccur 3 times sequentially then permanent lockout will occur.)
9. A 4 x 20 digit backlit LCD to display the following:
   a. Entering and leaving water temperatures
   b. High pressure, low pressure, low voltage, high voltage, low water temperature cutout, and control status
10. The low pressure shall not be monitored for the first 120 seconds after a compressor start command to prevent nuisance safety trips.
11. Remote fault indication on the thermostat
12. An accessory relay output tied to each compressor selectable for normally open or normally closed

Optional N2 Open, BacNet, or LonWorks - Units shall have all the features listed above and the control board will be supplied with a interface card of choice. This will permit all units to be daisy chain connected by a 2-wire twisted pair shielded cable. The following points must be available at a central or remote computer location:

- Source leaving water temperature
- Load leaving water temperature
- Cooling status
- Heating status
- Emergency shutdown command

Accessories

Flow Proving Switch

Part Number - FPS300

A flow proving switch shall be available utilizing high reliability flow sensing technology.

Strainer Connection Kit

Part Number - CKNDW1

A strainer connection kit shall be available and includes a 2 in. [50.8 mm] Y-strainer with self-aligning screen and 1 in. [25.4 mm] blow-off port to reduce debris that will enter the heat exchanger. Strainers should be made of a brass body with a 316 stainless steel screen. Connection kit shall also include a 2 in. [50.8 mm] wrought copper tee with integral pressure/temperature port.

Strainer Hose Kit Set

Part Number - HHK162S

A strainer hose kit set shall be available and includes a 2 in. strainer loaded with 20-40 mesh screen and blow down valve, 2 in. stainless steel braid hose, 2 in. ball valve with integral pressure/temperature port and a JIC swivel fitting on the supply and 2 in. stainless steel braid hose and 2 in. ball valve with integral pressure/temperature port and a JIC swivel fitting on the return hose. The hose kit assembly shall be pressure rated at 300 psi working pressure.

NOTE: A strainer kit is required on both sides to reduce heat exchanger fouling and potential damage.

The manufacturer works continually to improve its products. As a result, the design and specifications of each product at the time of order may be changed without notice. Purchaser's approval of this data set signifies that the equipment is acceptable under the provisions of the job specification. Statements and other information contained herein are not express warranties and do not form the basis of any bargain between the parties, but are merely the manufacturer's opinion or commendation of its products.