GEOSTAR

SPECIFICATION CATALOG

GEOTHERMAL HEAT PUMPS

ASTON SERIES AIR HANDLER

Table of Contents

Air Handler Nomenclature 4
Physical Data 4
Design Features and Benefits 5-6
Dimensional Data (Cabinet & Connections) 7-10
Electrical Data 11
Compatibility 11
Wiring Schematics 12-13
Blower Performance 14
Coil Performance 15-16
Coil Nomenclature 17
Refrigerant Coil Compatibility 17
Coil Physical Data 17
Dimensional Data (Coils) 18-21
Engineering Guide Specifications 22
Revision Guide 23

Model Nomenclature

1-3	4-6	7	8-9	10	11	12
GAH	036	*	00	0	1	R

Model
GAH – G Series Air Handler

Unit Capacity
Refrigeration (DX) Models with Nominal CFM

022 MBTUH	800
026 MBTUH	925
030 MBTUH	980
036 MBTUH	1225
042 MBTUH	1425
048 MBTUH	1625
060 MBTUH	1760

Hydronic Models with Nominal CFM

026 MBTUH	925
036 MBTUH	1225
048 MBTUH	1625
060 MBTUH	1760

Vintage
* = Factory Use Only

Air Coil
R – Refrigerant
H - Hydronic

Motor
1 – ECM 208-230/60/1

Disconnect
0 – No Breaker Installed
(only on 5kW & 10kW Heaters)
1 – Breaker Installed
(only on 15kW & 20kW Heaters)

Electric Heat
00 – None
05 – 5kW (022 – 036 only)
10 – 10kW (030 – 060 only)
15 – 15kW (042 – 060 only)
20 – 20kW (060 only)

Rev.: 08 April 2013D

NOTE: To field convert the GAH042-060 to bottomflow air discharge, the NAHBC kit must be ordered.

Physical Data

Air Handler Model Number (Refrigerant)		GAH022	GAH026	GAH030	GAH036	GAH042	GAH048	GAH060
Evaporator Coil	Air Coil Total Face Area, ft2 [m2]	5.83 [0.54]						
	Tube outside diameter - in. [mm]	3/8 [9.52]						
	Number of rows	2				3		
	Fins per inch	12						
	Suction line connection - in. [mm] sweat	5/8 [15.87]				7/8 [22.22]		
	Liquid line connection - in. [mm] sweat	3/8 [9.52]						
Refrigerant		R-410a						
Nominal cooling capacity - tons [kW]		1.8 [6.44]	2.1 [7.59]	2.5 [8.79]	3 [10.55]	3.5 [12.30]	4 [14.06]	5 [17.58]
Condensate drain connection - (O.D.) in. [mm]		3/4 [19.05]						
Blower Wheel Size (Dia x W), in. [mm]		11 x 10 [279 x 254]						
Blower motor type/speeds		ECM variable speed						
Blower motor output - hp [W]		1/2 [373]				1 [746]		
Filter Standard - 1" [51mm] MERV3 disposable, in. [mm]		20 x 24 [508 x 635]						
Electrical characteristics (60hz)		208/230 - 1ph						
Shipping weight - lbs. [kg]		215 [97.52]				220 [99.79]		
Operating weight - lbs. [kg]		195 [88.45]				200 [90.71]		

4/28/14

Air Handler Model Number (Hydronic)		GAH026	GAH036	GAH048	GAH060
Hydronic Coil	Air Coil Total Face Area, ft2 [m2]	6.94 [0.64]			
	Tube outside diameter - in. [mm]	3/8 [9.52]			
	Number of rows	3			
	Fins per inch	13			
	Water In connection - in. [mm] sweat	7/8 [22.22]			
	Water Out connection - in. [mm] sweat	7/8 [22.22]			
Nominal cooling capacity - tons [kW]		2.1 [7.59]	3 [10.55]	4 [14.06]	5 [17.58]
Condensate drain connection - (FPT) in. [mm]		3/4 [19.05]			
Blower Wheel Size (Dia x W), in. [mm]		11 x 10 [279 x 254]			
Blower motor type/speeds		ECM variable speed			
Blower motor output - hp [W]		1/2 [373]		1 [746]	
Filter Standard - 1" [51mm] MERV3 disposable, in. [mm]		20 x 24 [508 x 635]			
Electrical characteristics (60hz)		208/230 - 1ph			
Shipping weight - lbs. [kg]		220 [99.79]			
Operating weight - lbs. [kg]		200 [90.71]			

Note: Water connection dimensions are O.D.

4/28/14

Design Features and Benefits

Easy to access control panel

Slide out blower assembly

Field switchable, four position design (Horizontal Left/Right, Vertical & Bottomflow

Narrow design for attic access
Width - 21″ [53.3 cm]
Height - 57.3″ [145.5 cm]
Depth - 26.1″ [66.3 cm]

Factory installed TXV

1″ Filter Rack

Factory installed Internal Electric Heat with circuit breakers on 15 kW and 20 kW models

Variable speed ECM blower motor

Foil lined, cleanable insulation

Electro-coated air coil

DX or hydronic “A” coil

Corrosion resistant coated galvanized steel drain pan

Ease of Conversion

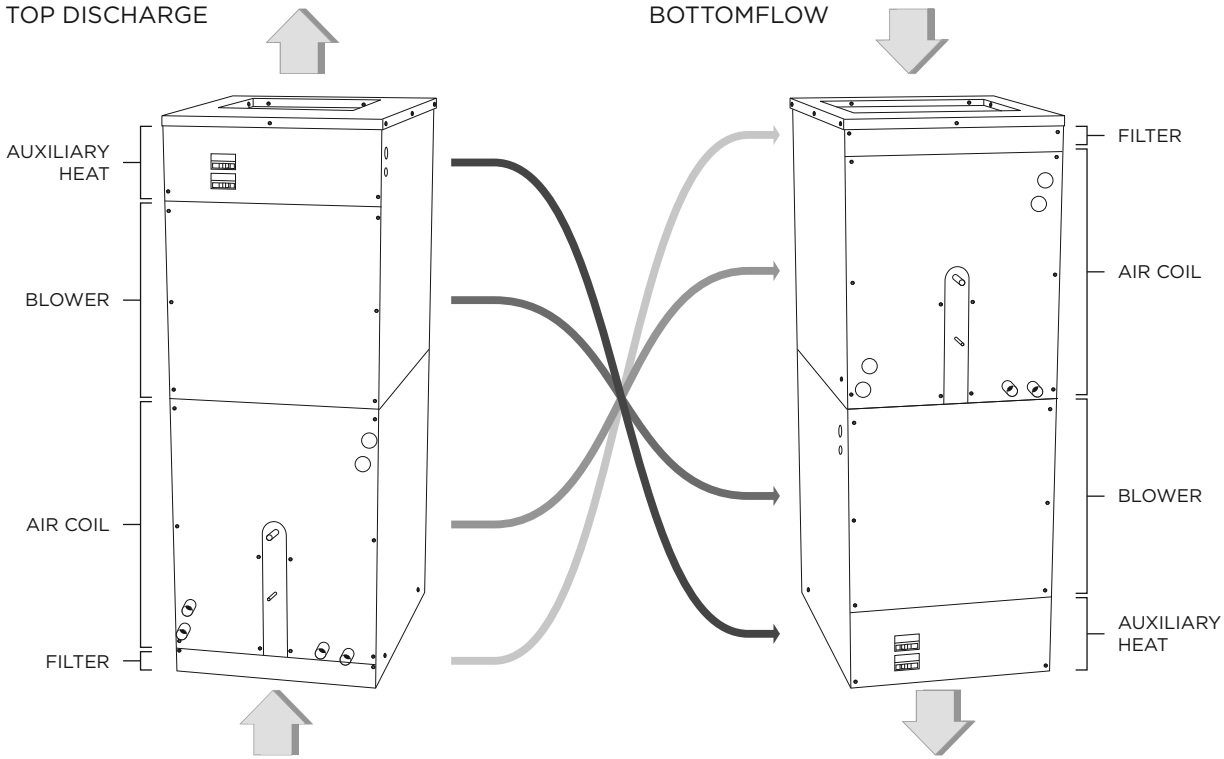

Air Handler Features and Benefits

Air Coil

Designed for R-410A refrigerant. Configured as a 'A' coil, rifled copper tubes and enhanced corrugated lanced aluminum fins to provide high efficiencies at low face velocities. Electro-coated for added protection.

Cabinet

Constructed of heavy gauge environmentally-responsible galvanized steel for maximum corrosion resistance. All units are painted with a silver metallic powder coat finish. All interior surfaces are lined with 1/2″ thick, foil lined acoustic type fiber insulation, applied in a manner that prevents the introduction of glass fibers into the air stream. Multiple knockouts in various sizes facilitate power and low voltage wiring. Multiple access panels for ease of service.

Controls

ECM interface board allows for blower speed selection and thermostat inputs.

Auxiliary/Emergency Heat

Optional factory installed electric heat.

Installation Ease

Cabinets are shipped in one piece but can be separated into two pieces for ease of installation in tight spaces.

Auxiliary/ Emergency Electric Heat

Electric heat packages can be factory or field installed. For field installed electric heat the Auxiliary Heat Compatibility table below shows the available heater packages for the air handler.

Configurations

Cabinets are factory configured for upflow and horizontal left hand air discharge installation but can be easily configured for horizontal right hand or bottomflow air discharge.

Drain Pans

Two e-coated galvanized steel drain pans included. One for vertical and one for horizontal applications — both have dual drains.

Electrical Disconnect

Factory installed circuit breaker on 15 kW/20 kW heaters.

Expansion Device

Factory installed TXV with internal check valve inside of cabinet.

Refrigerant Connections

Suction and liquid lines have sweat connections extended outside of cabinet for ease of connection.

Auxiliary Heat Compatibility

Model	kW	Stages	Min CFM	Air Handler Compatibility			
				022 - 026	030 - 036	042 - 048	060
19P578-01	5	1	740	✓	✓		
19P578-02	10	2	900		✓	✓	✓
19P578-03	15	2	1275			✓	✓
19P578-04	20	2	1700				✓

6/30/2008

Dimensional Data - DX Air Handler

Top Flow/Horizontal Unit Configuration

TOP VIEW

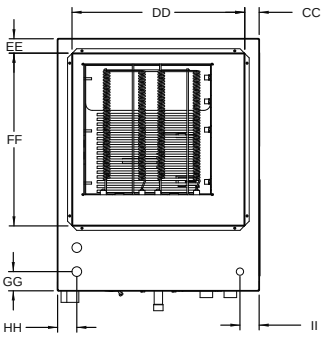

BOTTOM VIEW

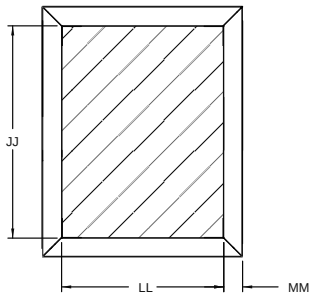

FRONT VIEW

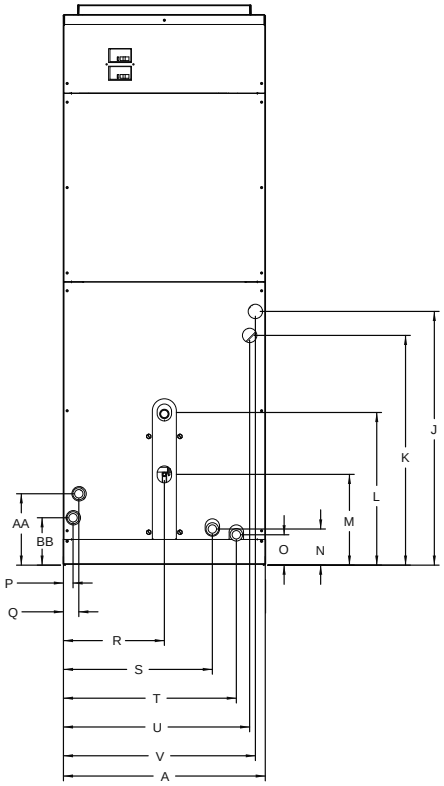

RIGHT SIDE VIEW

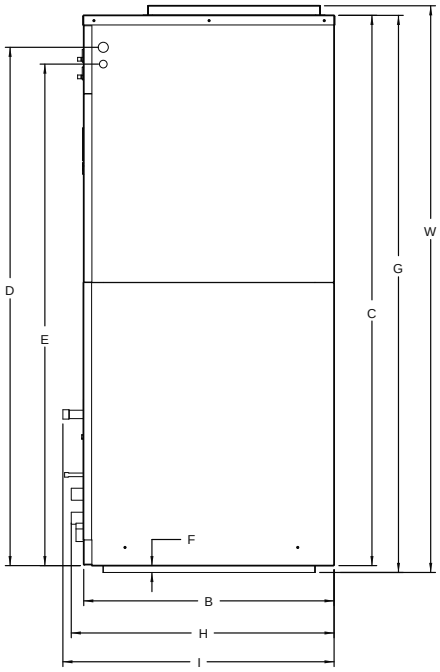

Topflow/ Horizontal Configuration		Overall Cabinet											Refrigerant/Water Connections							
		A Width	B Depth	C Height	D 3/4" cond Power Supply	E 1/2" cond Low Voltage	F Return Air Duct Flange	G	H	I	J	K	L Suction / Water Out	M Liquid / Water In	N	O	P	Q	R	S
026-060	in.	21.0	26.1	57.3	54.0	52.3	0.7	58.1	27.4	28.3	26.8	24.3	16.0	9.8	4.0	3.1	0.8	1.5	10.5	15.5
	cm.	53.4	66.3	145.6	137.2	132.7	1.8	147.4	69.6	71.8	68.1	61.7	40.6	24.9	10.2	7.9	2.0	3.9	26.7	39.4

															GG	HH	II				
S	T	U	V	W	X	Y	Z	AA	BB	CC	DD	EE	FF		1" cond Power Supply		1/2" cond Low Voltage	JJ	KK	LL	MM
15.5	18.0	19.5	20.1	59.5	15.1	53.1	51.3	7.8	5.2	1.5	18.0	1.5	18.0		2.0	2.0	2.0	22.1	2.0	16.9	1.96
39.4	45.8	49.5	51.0	151.1	38.4	134.9	130.2	19.8	13.2	3.8	45.7	3.8	45.7		5.1	5.1	5.1	56.2	5.0	42.9	5.0

Condensate is stainless steel 3/4" O.D. tube
Discharge flange is field installed and extends 1" (25.4 mm) from cabinet

Rev: 4/28/14

Dimensional Data - DX Air Handler

Bottom Flow Unit Configuration

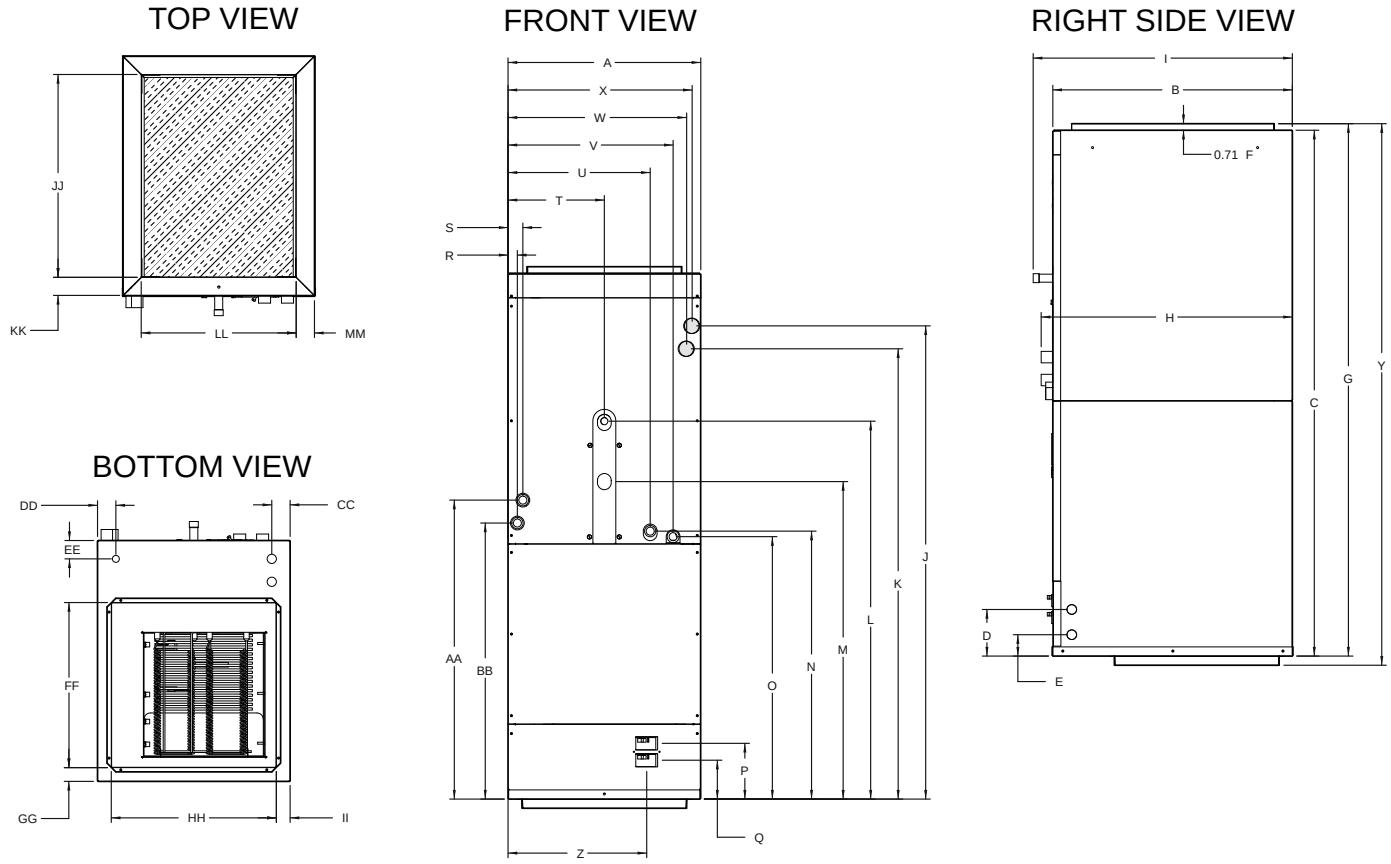

Bottomflow Configuration		Overall Cabinet			D	E	F						Refrigerant/Water Connections						
		A	B	C	3/4" cond	1" cond	Return	G	H	I	J	K	L	M	N	O	P	Q	R
		Width	Depth	Height	Low Voltage	Power Supply	Air Duct Flange						Suction / Water Out	Liquid / Water In					
026-060	in.	21.0	26.1	57.3	5.1	3.3	0.7	58.1	27.4	28.3	51.9	49.4	41.2	34.9	29.2	28.2	6.1	4.2	0.9
	cm.	53.4	66.3	145.6	12.9	8.5	1.8	147.4	69.6	71.8	131.8	125.5	104.7	88.7	74.2	71.6	15.4	10.8	2.4

										CC	DD	EE								
S	T	U	V	W	X	Y	Z	AA	BB	1" cond	1/2" cond		FF	GG	**HH**	II	JJ	KK	LL	MM
										Power Supply	Low Voltage									
1.5	10.5	15.5	18.0	19.5	20.1	59.1	15.1	32.9	30.4	2.0	2.0	2.0	18.0	1.5	18.0	1.5	22.1	2.0	16.9	1.96
3.9	26.7	39.4	45.8	49.5	51.0	150.0	38.4	83.6	77.2	5.1	5.1	5.1	45.7	3.8	45.7	3.8	56.2	5.0	42.9	5.0

Condensate is stainless steel 3/4" O.D. tube
Discharge flange is field installed and extends 1" (25.4 mm) from cabinet

Rev: 4/28/14

Dimensional Data - Hydronic Air Handler

Top Flow/Horizontal Unit Configuration

TOP VIEW

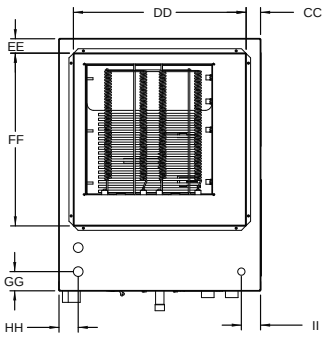

BOTTOM VIEW

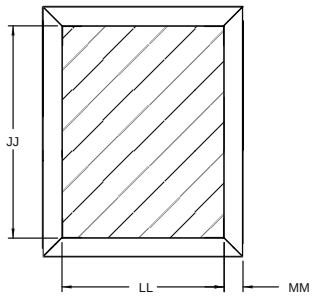

FRONT VIEW

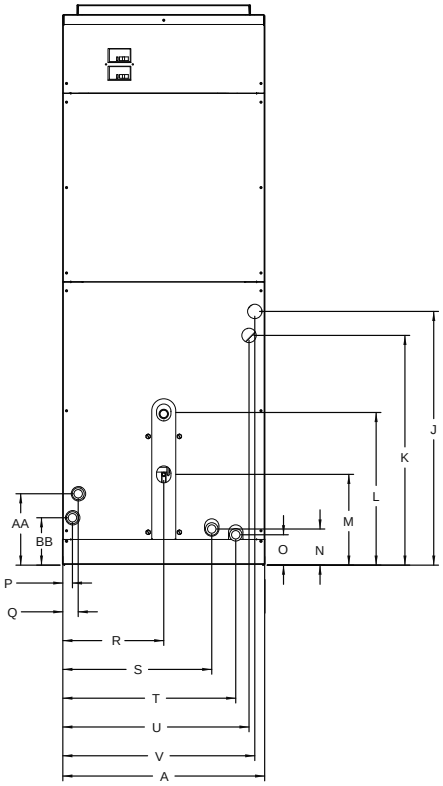

RIGHT SIDE VIEW

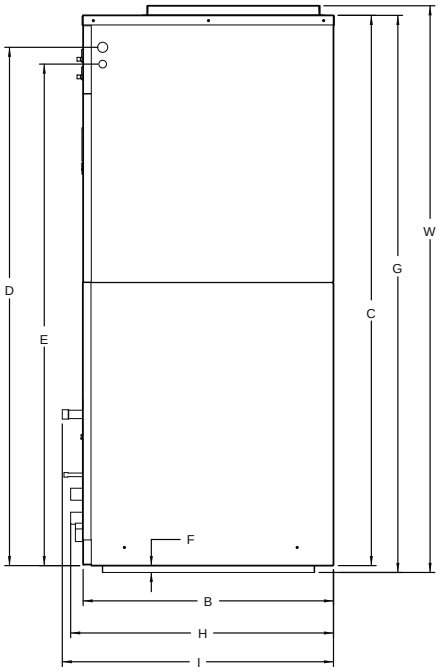

Topflow/ Horizontal Configuration		Overall Cabinet											Refrigerant/Water Connections						
		A Width	B Depth	C Height	D 3/4" cond Power Supply	E 1/2" cond Low Voltage	F Return Air Duct Flange	G	H	I	J	K	L Suction / Water Out	M Liquid / Water In	N	O	P	Q	R	S
026-060	in.	21.0	26.1	57.3	54.0	52.3	0.7	58.1	27.4	28.3	26.4	23.9	15.9	9.5	3.8	3.2	0.9	1.5	10.5	15.5
	cm.	53.4	66.3	145.6	137.2	132.7	1.8	147.4	69.6	71.8	67.2	60.8	40.4	24.0	9.6	8.1	2.4	3.9	26.7	39.4

S	T	U	V	W	X	Y	Z	AA	BB	CC	DD	EE	FF	GG 1" cond Power Supply	HH	II 1/2" cond Low Voltage	JJ	KK	LL	MM
15.5	18.0	19.5	20.1	59.5	15.1	53.1	51.3	7.4	4.9	1.5	18.0	1.5	18.0	2.0	2.0	2.0	22.1	2.0	16.9	1.96
39.4	45.8	49.5	51.0	151.1	38.4	134.9	130.2	18.9	12.5	3.8	45.7	3.8	45.7	5.1	5.1	5.1	56.2	5.0	42.9	5.0

Condensate is stainless steel 3/4" FPT
Discharge flange is field installed and extends 1" (25.4 mm) from cabinet

Rev: 5/02/14

Dimensional Data - Hydronic Air Handler

Bottom Flow Unit Configuration

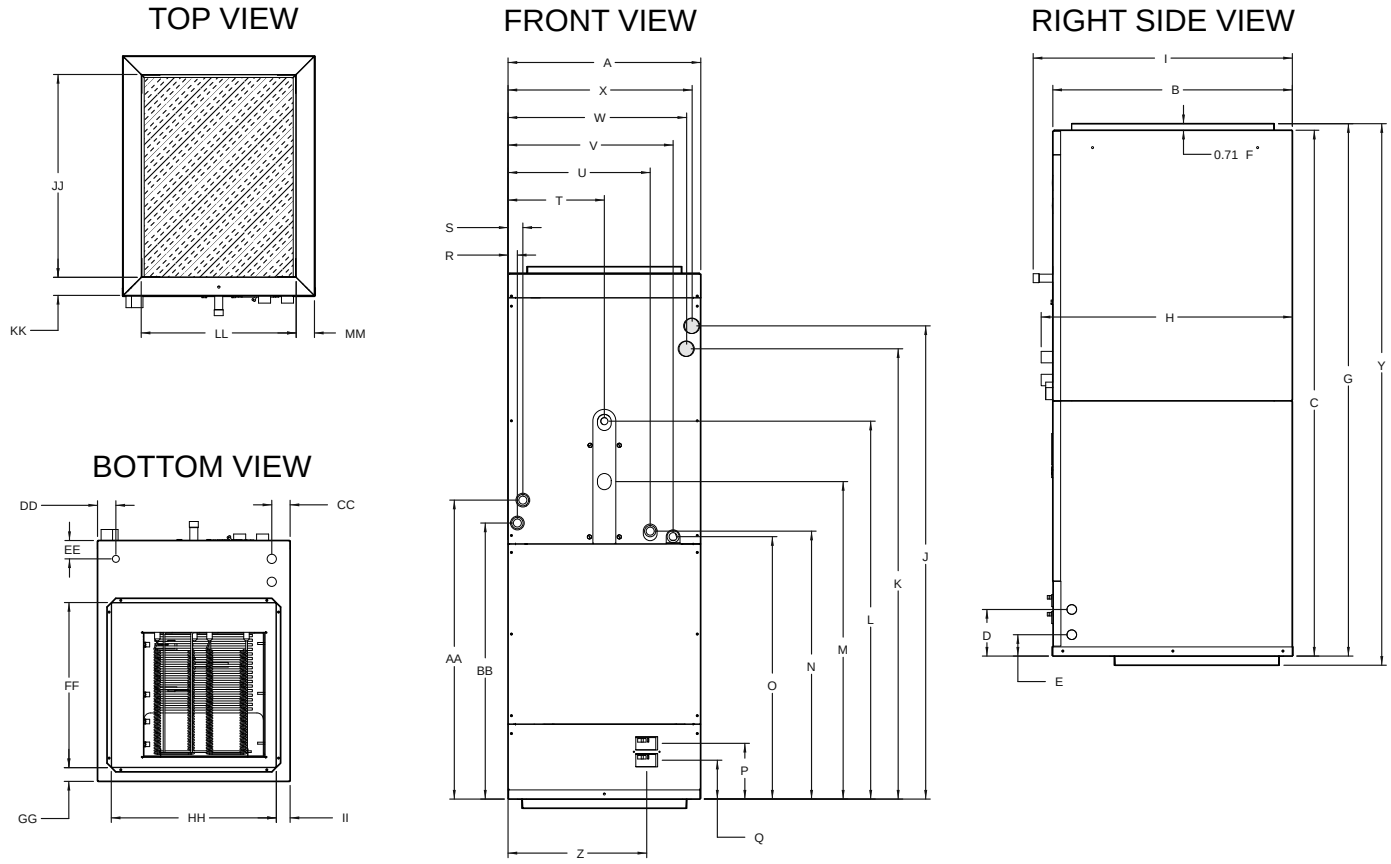

Bottomflow Configuration		Overall Cabinet											Refrigerant/Water Connections						
					D	E	F												
		A Width	B Depth	C Height	3/4" cond Low Voltage	1" cond Power Supply	Return Air Duct Flange	G	H	I	J	K	L Suction / Water Out	M Liquid / Water In	N	O	P	Q	R
026-060	in.	21.0	26.1	57.3	5.1	3.3	0.7	58.1	27.4	28.3	51.6	49.1	41.2	34.6	29.2	28.6	6.1	4.2	0.9
	cm.	53.4	66.3	145.6	12.9	8.5	1.8	147.4	69.6	71.8	131.1	124.7	104.7	87.9	74.2	72.7	15.4	10.8	2.4

										CC	DD	EE								
S	T	U	V	W	X	Y	Z	AA	BB	1" cond Power Supply	1/2" cond Low Voltage		FF	GG	HH	II	JJ	KK	LL	MM
1.5	10.5	15.5	18.0	19.5	20.1	59.1	15.1	32.6	30.1	2.0	2.0	2.0	18.0	1.5	18.0	1.5	22.1	2.0	16.9	1.96
3.9	26.7	39.4	45.8	49.5	51.0	150.0	38.4	82.8	76.5	5.1	5.1	5.1	45.7	3.8	45.7	3.8	56.2	5.0	42.9	5.0

Condensate is stainless steel 3/4" FPT
Discharge flange is field installed and extends 1" (25.4 mm) from cabinet

Rev: 5/02/14

Electrical Data

Model	Electric Heat Capacity		Supply Circuit	Aux. Heat Minimum CFM	Rated Voltage	Voltage Min/ Max	Blower Motor FLA	Heater Ampacity		Total Unit FLA		Minimum Circuit Ampacity		Maximum Fuse/ HACR	
	KW	BTUH													
	240v	240v						208v	240v	208v	240v	208v	240v	208v	240v
022	0	0	-		208-230/60/1	197/253	4.0	-	-	4.0	4.0	5.0	5.0	10	10
	4.8	16,382	single	740			4.0	17.3	20.0	21.3	24.0	26.6	30.0	30	30
026	0	0	-				4.0	-	-	4.0	4.0	5.0	5.0	10	10
	4.8	16,382	single	740			4.0	17.3	20.0	21.3	24.0	26.6	30.0	30	30
030	0	0	-				4.0	-	-	4.0	4.0	5.0	5.0	10	10
	4.8	16,382	single	740			4.0	17.3	20.0	21.3	24.0	26.6	30.0	30	30
	9.6	32,765	single	900			4.0	34.7	40.0	38.7	44.0	48.4	55.0	50	60
036	0	0	-				4.0	-	-	4.0	4.0	5.0	5.0	10	10
	4.8	16,382	single	740			4.0	17.3	20.0	21.3	24.0	26.6	30.0	30	30
	9.6	32,765	single	900			4.0	34.7	40.0	38.7	44.0	48.4	55.0	50	60
042	0	0	-				7.0	-	-	7.0	7.0	8.8	8.8	15	15
	9.6	32,765	single	900			7.0	34.7	40.0	41.7	47.0	52.1	58.8	60	60
	14.4	49,147	single	1,275			7.0	52.0	60.0	59.0	67.0	73.8	83.8	80	90
	14.4	49,147	L1/L2				7.0	34.7	40.0	41.7	47.0	52.1	58.8	60	60
			L3/L4				-	17.3	20.0	17.3	20.0	21.6	25.0	25	25
048	0	0	-				7.0	-	-	7.0	7.0	8.8	8.8	15	15
	9.6	32,765	single	900			7.0	34.7	40.0	41.7	47.0	52.1	58.8	60	60
	14.4	49,147	single	1,275			7.0	52.0	60.0	59.0	67.0	73.8	83.8	80	90
	14.4	49,147	L1/L2				7.0	34.7	40.0	41.7	47.0	52.1	58.8	60	60
			L3/L4				-	17.3	20.0	17.3	20.0	21.6	25.0	25	25
060	0	0	-				7.0	-	-	7.0	7.0	8.8	8.8	15	15
	9.6	32,765	single	900			7.0	34.7	40.0	41.7	47.0	52.1	58.8	60	60
	14.4	49,147	single	1,275			7.0	52.0	60.0	59.0	67.0	73.8	83.8	80	90
	14.4	49,147	L1/L2				7.0	34.7	40.0	41.7	47.0	52.1	58.8	60	60
			L3/L4				-	17.3	20.0	17.3	20.0	21.6	25.0	25	25
	19.2	65,530	single	1,700			7.0	69.3	80.0	76.3	87.0	95.4	108.8	100	110
	19.2	65,530	L1/L2				7.0	34.7	40.0	41.7	47.0	52.1	58.8	60	60
			L3/L4				-	34.7	40.0	34.7	40.0	43.4	50.0	50	50

7/11/08

Rated Voltage of 208/230/60/1
HACR circuit breaker in USA only

Compatibility

Air Handler Sizing Selection

The Aston Series Air Handlers are designed for R410a refrigerant and should be matched with Aston indoor or outdoor series compressor section according to the table below.

Air Handler	Indoor Split Model (Single)	Indoor Split Model (Dual Capacity)	Outdoor Split Model (Dual Capacity)	Airflow(CFM)	Electric Heat (kW)
GAH022B*1R**	103*022	-		800	5
GAH026B*1R**	-	103*026	104*026	925	5
GAH030B*1R**	103*030	-	-	980	5, 10
GAH036B*1R**	103*036	-	-	1225	5, 10
GAH036B*1R**	-	103*038	104*038	1225	5, 10
GAH042B*1R**	103*042	-	-	1425	10, 15
GAH048B*1R**	103*048	-	-	1625	10, 15
GAH048B*1R**	-	103*049	104*049	1625	10, 15
GAH060B*1R**	103*060	-	-	1760	10, 15, 20
GAH060B*1R**	-	103*064	104*064	1760	10, 15, 20
GAH060B*1R**	103*070	-	-	1760	10, 15, 20
GAH060B*1R**	-	103*072	104*072	1760	10, 15, 20

4/28/14

Wiring Schematics

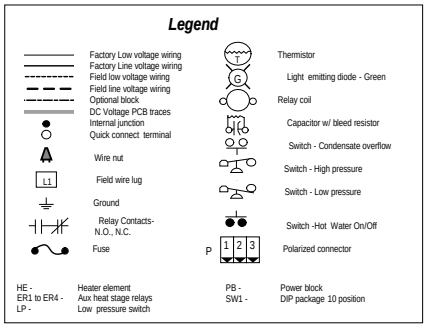

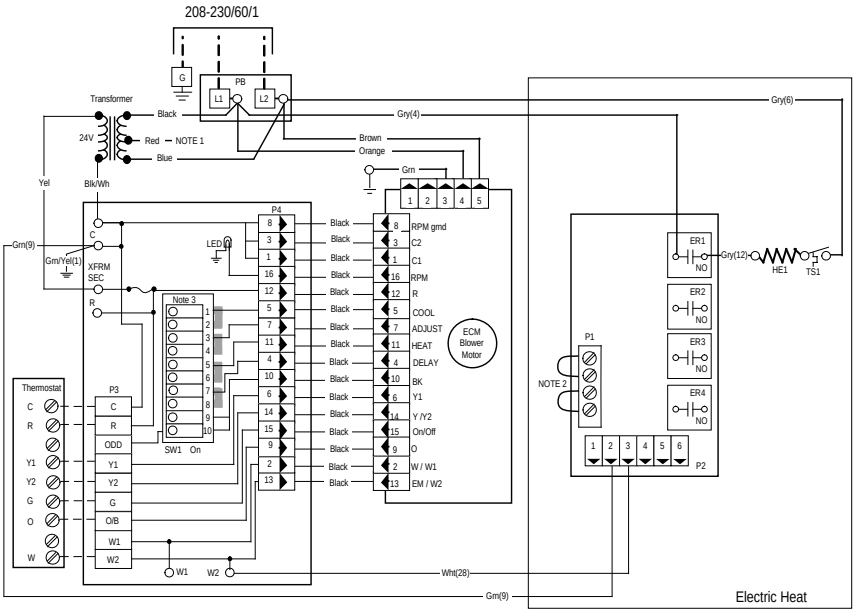

Air Handler w/ 5kW Electric Heat

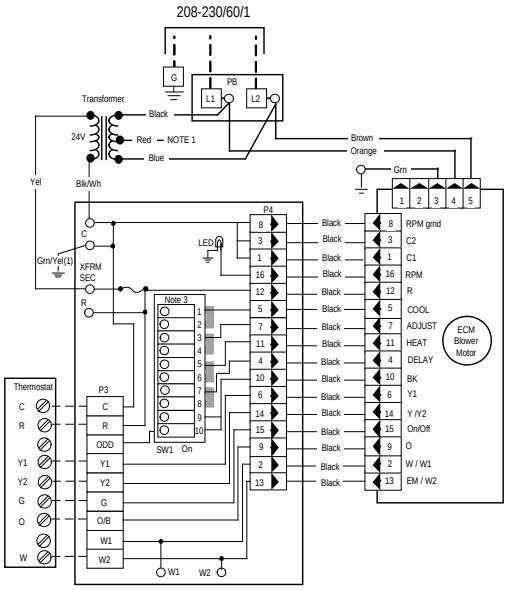

Air Handler No Electric Heat

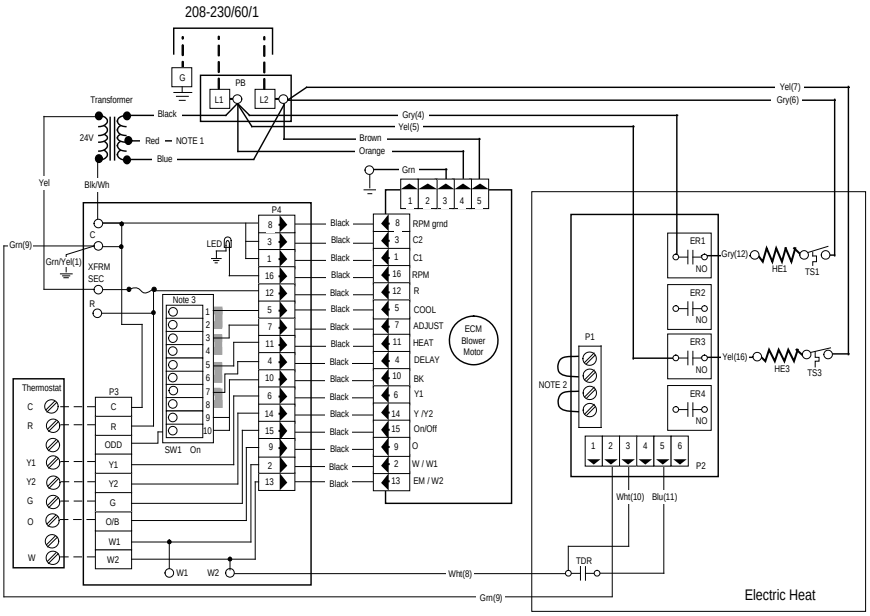

Air Handler w/ 10kW Electric Heat

Notes:
1 – To operate in 208V mode replace the blue transformer wire connected to PB-L2 with red transformer wire.
2 – Jumper wires tie stages (1) with (2) and (3) with (4).
3 – Dip switches are used to select the air flow.

97P787-01 02/05/13

Wiring Schematics cont.

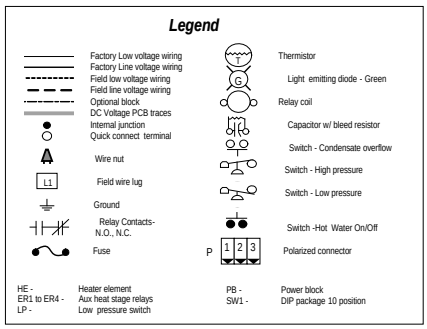

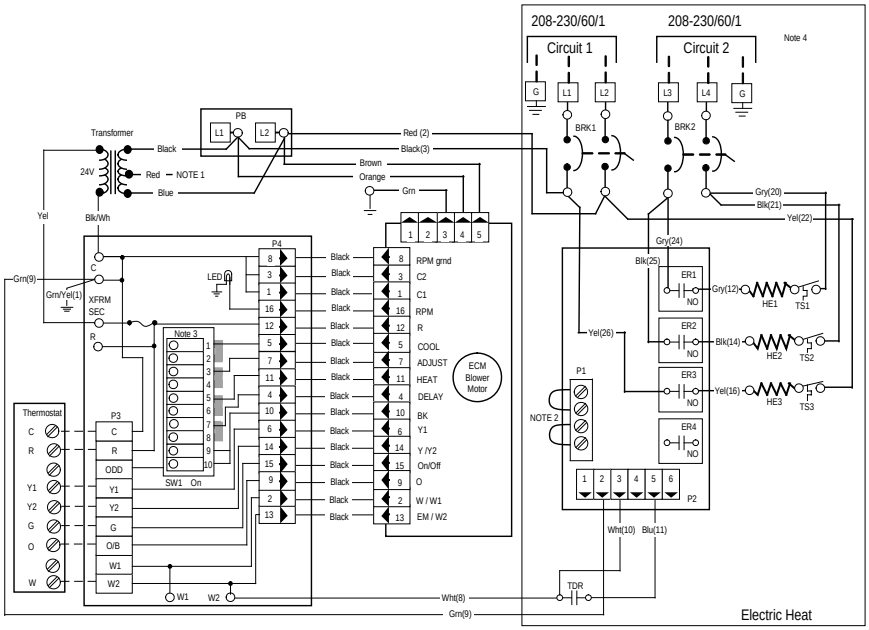

Air Handler w/ 15kW Electric Heat

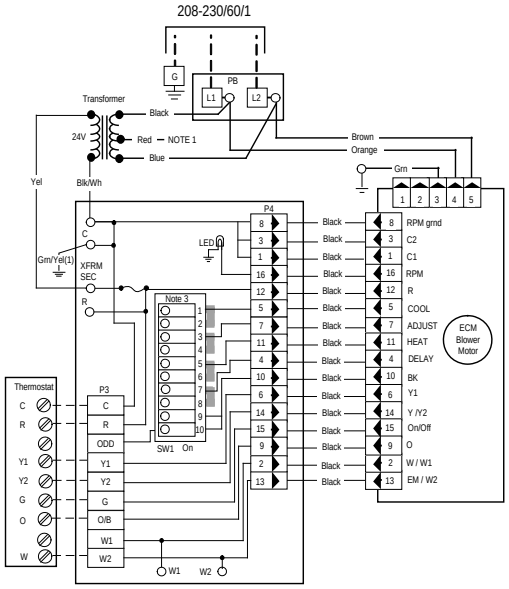

Air Handler No Electric Heat

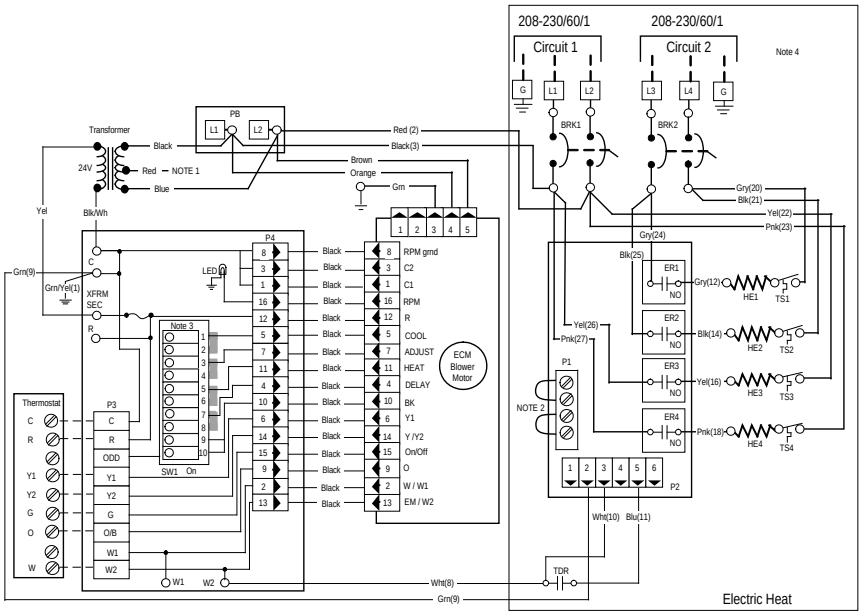

Air Handler w/ 20kW Electric Heat

Notes:
1 – To operate in 208V mode replace the blue transformer wire connected to PB-L2 with red transformer wire.
2 – Jumper wires tie stages (1) with (2) and (3) with (4).
3 – Dip switches are used to select the air flow.
4 – For single circuit operation field supplied jumper wires should be applied between L1 & L3 and L2 & L4. Jumper wires must be sized to carry the single circuit ampacity of the equipment.

97P787-01 02/05/13

Blower Performance

Blower Performance Variable Speed ECM

Model	Max ESP (wg)	Blower Motor (hp)	HP CFM Setting		Normal Mode Htg & Clg			Dehumidification Mode Clg				Aux CFM Setting		Aux Emerg Mode
			S1	S2	Stg 2	Stg 1	Blower	S9	Stg 2	Stg 1	Blower	S5	S6	
022	0.50	1/2	On	On	900	700	450	Off	775	600	450	On	On	1000
	0.50	1/2	**Off**	**On**	**800**	**625**	**400**	Off	680	530	400	**Off**	**On**	**800**
	0.50	1/2	On	Off	700	540	375	Off	600	450	375	On	Off	775
	0.50	1/2	Off	Off	640	480	350					Off	Off	740
026	0.50	1/2	On	On	1050	800	525	Off	850	700	525	On	On	1150
	0.50	1/2	**Off**	**On**	**925**	**725**	**475**	Off	760	620	475	**Off**	**On**	**950**
	0.50	1/2	On	Off	800	625	425	Off	670	540	425	On	Off	925
	0.50	1/2	Off	Off	740	575	400					Off	Off	825
030	0.50	1/2	On	On	1150	950	600	Off	975	775	600	On	On	1250
	0.50	1/2	**Off**	**On**	**980**	**780**	**500**	Off	825	640	500	**Off**	**On**	**1000**
	0.50	1/2	On	Off	900	700	440	Off	750	580	440	On	Off	975
	0.50	1/2	Off	Off	800	630	425					Off	Off	900
036	0.50	1/2	On	On	1300	1025	760	Off	1105	871	760	On	On	1300
	0.50	1/2	**Off**	**On**	**1225**	**950**	**685**	Off	1041	808	685	**Off**	**On**	**1250**
	0.50	1/2	On	Off	1150	850	620	Off	940	690	620	On	Off	1225
	0.50	1/2	Off	Off	1075	800	550					Off	Off	1200
042	0.75	1	On	On	1500	1100	750	Off	1250	900	750	On	On	1550
	0.75	1	**Off**	**On**	**1425**	**1010**	**650**	Off	1180	840	650	**Off**	**On**	**1450**
	0.75	1	On	Off	1300	975	635	Off	1080	800	635	On	Off	1400
	0.75	1	Off	Off	1150	850	625					Off	Off	1275
048	0.75	1	On	On	1700	1300	975	Off	1400	1080	975	On	On	1700
	0.75	1	**Off**	**On**	**1625**	**1240**	**875**	Off	1350	1025	875	**Off**	**On**	**1550**
	0.75	1	On	Off	1450	1100	750	Off	1200	900	750	On	Off	1525
	0.75	1	Off	Off	1300	1000	675					Off	Off	1400
060	0.75	1	On	On	1850	1750	1175	Off	1540	1450	1175	On	On	1850
	0.75	1	**Off**	**On**	**1760**	**1625**	**1050**	Off	1460	1350	1050	**Off**	**On**	**1760**
	0.75	1	On	Off	1720	1575	1015	Off	1425	1300	1015	On	Off	1725
	0.75	1	Off	Off	1680	1525	975		1428			Off	Off	1700

2/3/10

Factory CFM settings are in boldface
CFM is controlled within 5% up to maximum ESP
Maximum ESP includes allowance for wet coil and standard filter
DIP switch 9 must be 'OFF' to select dehumidification mode

	DIPS	Switch Description
Air Handler DIP Switches	1	Used to set normal CFM
	2	
	3	Not used
	4	
	5	Used to set aux./emergency heat CFM
	6	
	7	Not used
	8	
	9	Used to set dehumidification CFM
	10	Not used

Hydronic Coil Performance

026-036 Heating/Cooling

(Refer to Indoor Split or Outdoor Split Specification Catalogs for refrigerant performance tables)

026 Hydronic Heating Capacity Tables

CFM	Flow gpm	100°F EWT			WPD		110°F EWT			WPD		120°F EWT			WPD		130°F EWT			WPD	
		HC kBtuh	Power kW	LAT	PSI	FT	HC kBtuh	Power kW	LAT	PSI	FT	HC kBtuh	Power kW	LAT	PSI	FT	HC kBtuh	Power kW	LAT	PSI	FT
575	3.0	15.5	0.09	95.0	0.4	0.9	20.9	0.09	103.6	0.4	0.9	26.2	0.09	112.2	0.4	0.9	31.4	0.09	120.6	0.4	0.9
	4.5	16.9	0.09	97.1	0.8	1.8	22.5	0.09	106.2	0.8	1.8	28.1	0.09	115.2	0.8	1.8	33.5	0.09	123.9	0.8	1.8
	6.0	18.2	0.09	99.3	1.2	2.8	24.1	0.09	108.7	1.2	2.8	29.9	0.09	118.2	1.2	2.8	35.5	0.09	127.2	1.2	2.8
740	3.0	17.1	0.13	91.3	0.4	0.9	22.9	0.13	98.6	0.4	0.9	28.7	0.13	105.9	0.4	0.9	34.5	0.13	113.1	0.4	0.9
	4.5	18.7	0.13	93.4	0.8	1.8	24.9	0.13	101.2	0.8	1.8	31.2	0.13	109.0	0.8	1.8	37.2	0.13	116.5	0.8	1.8
	6.0	20.3	0.13	95.4	1.2	2.8	27.0	0.13	103.8	1.2	2.8	33.7	0.13	112.1	1.2	2.8	39.9	0.13	119.9	1.2	2.8
925	3.0	18.6	0.15	88.6	0.4	0.9	24.9	0.15	94.9	0.4	0.9	31.2	0.15	101.2	0.4	0.9	37.5	0.15	107.5	0.4	0.9
	4.5	20.5	0.15	90.5	0.8	1.8	27.4	0.15	97.4	0.8	1.8	34.3	0.15	104.3	0.8	1.8	40.9	0.15	110.9	0.8	1.8
	6.0	22.4	0.15	92.4	1.2	2.8	29.9	0.15	99.9	1.2	2.8	37.4	0.15	107.4	1.2	2.8	44.3	0.15	114.3	1.2	2.8

026 Hydronic Cooling Capacity Tables

CFM	Flow gpm	40°F EWT					WPD		45°F EWT					WPD		50°F EWT					WPD		55°F EWT					WPD	
		TC kBtuh	SC kBtuh	S/T Ratio	Power kW	LAT	PSI	FT	TC kBtuh	SC kBtuh	S/T Ratio	Power kW	LAT	PSI	FT	TC kBtuh	SC kBtuh	S/T Ratio	Power kW	LAT	PSI	FT	TC kBtuh	SC kBtuh	S/T Ratio	Power kW	LAT	PSI	FT
575	3.0	24.0	16.8	0.70	0.09	52.9	0.5	1.2	20.0	15.2	0.76	0.09	55.5	0.5	1.2	16.0	13.6	0.85	0.09	58.1	0.5	1.2	12.4	11.5	0.93	0.09	61.5	0.5	1.2
	4.5	27.5	18.3	0.66	0.09	50.6	0.9	2.1	22.9	16.5	0.72	0.09	53.5	0.9	2.1	18.3	14.8	0.81	0.09	56.2	0.9	2.1	14.3	12.7	0.88	0.09	59.6	0.9	2.1
	6.0	31.0	19.7	0.64	0.09	48.3	1.4	3.2	25.8	17.7	0.69	0.09	51.4	1.4	3.2	20.6	15.8	0.77	0.09	54.6	1.4	3.2	16.2	13.8	0.85	0.09	57.8	1.4	3.2
740	3.0	25.2	18.4	0.73	0.13	57.0	0.5	1.2	21.3	16.7	0.78	0.13	59.2	0.5	1.2	17.4	14.9	0.86	0.13	61.4	0.5	1.2	13.8	13.0	0.94	0.13	63.7	0.5	1.2
	4.5	29.5	20.1	0.68	0.13	54.8	0.9	2.1	24.7	18.3	0.74	0.13	57.1	0.9	2.1	19.9	16.4	0.82	0.13	59.5	0.9	2.1	15.8	14.3	0.90	0.13	62.1	0.9	2.1
	6.0	33.9	21.9	0.65	0.13	52.7	1.4	3.2	28.2	19.9	0.71	0.13	55.1	1.4	3.2	22.5	17.9	0.80	0.13	57.6	1.4	3.2	17.8	15.6	0.87	0.13	60.5	1.4	3.2
925	3.0	26.4	20.0	0.76	0.15	60.0	0.5	1.2	22.6	18.2	0.81	0.15	61.8	0.5	1.2	18.7	16.3	0.87	0.15	63.7	0.5	1.2	15.2	14.5	0.95	0.15	65.5	0.5	1.2
	4.5	31.6	22.0	0.70	0.15	58.0	0.9	2.1	26.6	20.0	0.75	0.15	60.0	0.9	2.1	21.7	18.0	0.83	0.15	62.0	0.9	2.1	17.3	15.9	0.92	0.15	64.1	0.9	2.1
	6.0	36.7	24.0	0.65	0.15	56.0	1.4	3.2	30.7	21.8	0.71	0.15	58.1	1.4	3.2	24.6	19.7	0.80	0.15	60.3	1.4	3.2	19.4	17.3	0.89	0.15	62.7	1.4	3.2

036 Hydronic Heating Capacity Tables

CFM	Flow gpm	100°F EWT			WPD		110°F EWT			WPD		120°F EWT			WPD		130°F EWT			WPD	
		HC kBtuh	Power kW	LAT	PSI	FT	HC kBtuh	Power kW	LAT	PSI	FT	HC kBtuh	Power kW	LAT	PSI	FT	HC kBtuh	Power kW	LAT	PSI	FT
800	4.5	19.8	0.13	92.9	0.8	1.8	26.3	0.13	100.4	0.8	1.8	32.8	0.13	108.0	0.8	1.8	39.3	0.13	115.5	0.8	1.8
	7.0	21.2	0.13	94.5	1.6	3.7	27.8	0.13	102.2	1.6	3.7	34.5	0.13	109.9	1.6	3.7	41.4	0.13	117.9	1.6	3.6
	9.0	22.5	0.13	96.0	2.4	5.5	29.3	0.13	104.0	2.4	5.5	36.2	0.13	111.9	2.4	5.5	43.5	0.13	120.3	2.3	5.3
1075	4.5	22.4	0.20	89.3	0.8	1.8	29.7	0.20	95.5	0.8	1.8	36.9	0.20	101.8	0.8	1.8	43.8	0.20	107.7	0.8	1.8
	7.0	24.1	0.20	90.8	1.6	3.7	31.7	0.20	97.3	1.6	3.7	39.2	0.20	103.8	1.6	3.7	46.9	0.20	110.4	1.6	3.6
	9.0	25.8	0.20	92.2	2.4	5.5	33.7	0.20	99.0	2.4	5.5	41.6	0.20	105.8	2.4	5.5	50.0	0.20	113.0	2.3	5.3
1225	4.5	25.0	0.32	88.9	0.8	1.8	33.0	0.32	94.9	0.8	1.8	41.0	0.32	101.0	0.8	1.8	48.3	0.32	106.5	0.8	1.8
	7.0	27.1	0.32	90.4	1.6	3.7	35.5	0.32	96.9	1.6	3.7	44.0	0.32	103.3	1.6	3.7	52.4	0.32	109.6	1.6	3.6
	9.0	29.1	0.32	92.0	2.4	5.5	38.1	0.32	98.8	2.4	5.5	47.0	0.32	105.5	2.4	5.5	56.4	0.32	112.6	2.3	5.3

036 Hydronic Cooling Capacity Tables

CFM	Flow gpm	40°F EWT					WPD		45°F EWT					WPD		50°F EWT					WPD		55°F EWT					WPD	
		TC kBtuh	SC kBtuh	S/T Ratio	Power kW	LAT	PSI	FT	TC kBtuh	SC kBtuh	S/T Ratio	Power kW	LAT	PSI	FT	TC kBtuh	SC kBtuh	S/T Ratio	Power kW	LAT	PSI	FT	TC kBtuh	SC kBtuh	S/T Ratio	Power kW	LAT	PSI	FT
800	4.5	30.5	21.2	0.70	0.13	55.5	0.9	2.1	25.3	19.3	0.77	0.13	57.6	0.9	2.1	20.0	17.5	0.87	0.13	59.8	0.9	2.1	16.5	15.3	0.92	0.13	62.3	0.9	2.1
	7.0	35.9	23.5	0.65	0.13	52.8	1.9	4.3	29.8	21.2	0.71	0.13	55.4	1.9	4.3	23.7	19.7	0.83	0.13	57.2	1.8	4.0	18.8	16.5	0.87	0.13	60.9	1.8	4.0
	9.0	41.3	25.8	0.62	0.13	50.1	2.8	6.5	34.4	23.1	0.67	0.13	53.2	2.8	6.5	27.5	20.4	0.74	0.13	56.3	2.6	6.0	21.1	17.6	0.83	0.13	59.6	2.6	6.0
1075	4.5	32.4	23.4	0.72	0.20	59.8	0.9	2.1	27.1	21.5	0.79	0.20	61.5	0.9	2.1	21.8	19.6	0.90	0.20	63.1	0.9	2.1	18.0	16.8	0.93	0.20	65.5	0.9	2.1
	7.0	39.1	26.0	0.67	0.20	57.6	1.9	4.3	32.5	23.7	0.73	0.20	59.6	1.9	4.3	25.9	21.9	0.84	0.20	61.2	1.8	4.0	20.7	18.4	0.89	0.20	64.2	1.8	4.0
	9.0	45.9	28.6	0.62	0.20	55.3	2.8	6.5	38.0	25.9	0.68	0.20	57.7	2.8	6.5	30.0	23.2	0.77	0.20	60.0	2.6	6.0	23.3	19.9	0.85	0.20	62.8	2.6	6.0
1225	4.5	34.3	25.7	0.75	0.32	60.6	0.9	2.1	28.8	23.6	0.82	0.32	62.2	0.9	2.1	23.4	21.5	0.92	0.32	63.8	0.9	2.1	19.5	18.3	0.94	0.32	66.2	0.9	2.1
	7.0	42.4	28.6	0.67	0.32	58.4	1.9	4.3	35.2	26.0	0.74	0.32	60.3	1.9	4.3	28.1	24.0	0.85	0.32	61.9	1.8	4.0	22.5	20.3	0.90	0.32	64.7	1.8	4.0
	9.0	50.5	31.5	0.62	0.32	56.2	2.8	6.5	41.7	28.5	0.68	0.32	58.5	2.8	6.5	32.8	25.5	0.78	0.32	60.7	2.6	6.0	25.5	22.3	0.87	0.32	63.2	2.6	6.0

Hydronic Coil Performance cont.

(Refer to Indoor Split or Outdoor Split Specification Catalogs for refrigerant performance tables)

048-060 Heating/Cooling

048 Hydronic Heating Capacity Tables

CFM	Flow	100°F EWT			WPD		110°F EWT			WPD		120°F EWT			WPD		130°F EWT			WPD	
	gpm	HC kBtuh	Power kW	LAT	PSI	FT	HC kBtuh	Power kW	LAT	PSI	FT	HC kBtuh	Power kW	LAT	PSI	FT	HC kBtuh	Power kW	LAT	PSI	FT
1000	6.0	24.0	0.20	92.2	1.2	2.8	31.5	0.20	99.2	1.2	2.8	39.0	0.20	106.1	1.2	2.8	46.4	0.20	113.0	1.2	2.8
	9.0	25.1	0.20	93.2	2.6	6.0	33.0	0.20	100.6	2.6	6.0	40.9	0.20	107.9	2.6	6.0	48.7	0.20	115.1	2.6	5.9
	12.0	26.2	0.20	94.3	4.0	9.2	34.6	0.20	102.0	4.0	9.2	42.9	0.20	109.7	4.0	9.2	51.0	0.20	117.2	3.9	9.0
1300	6.0	28.3	0.33	90.1	1.2	2.8	37.2	0.33	96.5	1.2	2.8	46.2	0.33	102.9	1.2	2.8	55.4	0.33	109.4	1.2	2.8
	9.0	30.2	0.33	91.5	2.6	6.0	39.7	0.33	98.2	2.6	6.0	49.1	0.33	105.0	2.6	6.0	58.7	0.33	111.8	2.6	5.9
	12.0	32.1	0.33	92.9	4.0	9.2	42.1	0.33	100.0	4.0	9.2	52.1	0.33	107.1	4.0	9.2	62.0	0.33	114.2	3.9	9.0
1625	6.0	32.5	0.42	88.5	1.2	2.8	43.0	0.42	94.5	1.2	2.8	53.4	0.42	100.4	1.2	2.8	64.3	0.42	106.6	1.2	2.8
	9.0	35.3	0.42	90.1	2.6	6.0	46.3	0.42	96.4	2.6	6.0	57.4	0.42	102.7	2.6	6.0	68.7	0.42	109.1	2.6	5.9
	12.0	38.0	0.42	91.7	4.0	9.2	49.7	0.42	98.3	4.0	9.2	61.3	0.42	104.9	4.0	9.2	73.0	0.42	111.6	3.9	9.0

048 Hydronic Cooling Capacity Tables

CFM	Flow	40°F EWT					WPD		45°F EWT					WPD		50°F EWT					WPD		55°F EWT					WPD	
	gpm	TC kBtuh	SC kBtuh	S/T Ratio	Power kW	LAT	PSI	FT	TC kBtuh	SC kBtuh	S/T Ratio	Power kW	LAT	PSI	FT	TC kBtuh	SC kBtuh	S/T Ratio	Power kW	LAT	PSI	FT	TC kBtuh	SC kBtuh	S/T Ratio	Power kW	LAT	PSI	FT
1000	6.0	37.3	25.3	0.68	0.20	56.6	1.4	3.2	31.6	23.1	0.73	0.20	58.6	1.4	3.2	25.9	21.0	0.81	0.20	60.6	1.4	3.2	20.2	18.4	0.91	0.20	63.0	1.4	3.2
	9.0	43.6	28.0	0.64	0.20	54.0	3.0	6.9	36.6	25.5	0.70	0.20	56.4	3.0	6.8	29.4	23.0	0.78	0.20	58.7	2.9	6.7	22.4	19.6	0.88	0.20	61.8	2.9	6.6
	12.0	49.9	30.8	0.62	0.20	51.5	4.6	10.6	41.6	27.9	0.67	0.20	54.2	4.5	10.4	33.3	25.0	0.75	0.20	56.9	4.4	10.2	24.6	20.9	0.85	0.20	60.7	4.3	9.9
1300	6.0	40.5	29.2	0.72	0.33	59.2	1.4	3.2	34.6	26.6	0.77	0.33	61.1	1.4	3.2	28.8	23.9	0.83	0.33	63.0	1.4	3.2	22.7	21.1	0.93	0.33	65.0	1.4	3.2
	9.0	48.4	32.9	0.68	0.33	56.6	3.0	6.9	41.1	29.9	0.73	0.33	58.7	3.0	6.8	33.8	27.0	0.80	0.33	60.8	2.9	6.7	25.6	23.1	0.90	0.33	63.6	2.9	6.6
	12.0	56.4	36.6	0.65	0.33	53.9	4.6	10.6	47.5	33.2	0.70	0.33	56.4	4.5	10.4	38.7	29.8	0.77	0.33	58.8	4.4	10.2	28.4	25.1	0.88	0.33	62.1	4.3	9.9
1625	6.0	43.6	33.1	0.76	0.42	61.1	1.4	3.2	37.3	30.5	0.82	0.42	62.6	1.4	3.2	31.0	27.9	0.90	0.42	64.1	1.4	3.2	25.1	23.8	0.95	0.42	66.4	1.4	3.2
	9.0	53.3	37.8	0.71	0.42	58.5	3.0	6.9	45.0	34.2	0.76	0.42	60.5	3.0	6.8	36.7	30.6	0.84	0.42	62.5	2.9	6.7	28.7	26.6	0.92	0.42	64.9	2.9	6.6
	12.0	63.0	42.4	0.67	0.42	55.9	4.6	10.6	52.6	37.9	0.72	0.42	58.4	4.5	10.4	42.3	33.3	0.79	0.42	61.0	4.4	10.2	32.3	29.3	0.91	0.42	63.3	4.3	9.9

060 Hydronic Heating Capacity Tables

CFM	Flow	100°F EWT			WPD		110°F EWT			WPD		120°F EWT			WPD		130°F EWT			WPD	
	gpm	HC kBtuh	Power kW	LAT	PSI	FT	HC kBtuh	Power kW	LAT	PSI	FT	HC kBtuh	Power kW	LAT	PSI	FT	HC kBtuh	Power kW	LAT	PSI	FT
1525	7.5	33.1	0.38	90.1	1.7	3.9	43.6	0.38	96.5	1.7	3.9	54.0	0.38	102.8	1.7	3.9	65.2	0.38	109.6	1.6	3.7
	11.0	34.9	0.38	91.2	3.9	8.9	46.0	0.38	97.9	3.9	8.9	57.0	0.38	104.6	3.8	8.8	69.0	0.38	111.9	3.7	8.5
	15.0	36.7	0.38	92.3	6.0	13.9	48.4	0.38	99.4	6.0	13.9	60.0	0.38	106.4	5.9	13.6	72.7	0.38	114.1	5.8	13.4
1680	7.5	35.4	0.48	89.5	1.7	3.9	46.6	0.48	95.7	1.7	3.9	57.7	0.48	101.8	1.7	3.9	69.4	0.48	108.2	1.6	3.7
	11.0	37.8	0.48	90.8	3.9	8.9	49.7	0.48	97.4	3.9	8.9	61.5	0.48	103.9	3.8	8.8	73.9	0.48	110.7	3.7	8.5
	15.0	40.2	0.48	92.2	6.0	13.9	52.8	0.48	99.1	6.0	13.9	65.3	0.48	106.0	5.9	13.6	78.5	0.48	113.3	5.8	13.4
1760	7.5	37.7	0.56	89.8	1.7	3.9	49.6	0.56	96.1	1.7	3.9	61.4	0.56	102.3	1.7	3.9	73.5	0.56	108.7	1.6	3.7
	11.0	40.7	0.56	91.4	3.9	8.9	53.4	0.56	98.1	3.9	8.9	66.0	0.56	104.7	3.8	8.8	78.9	0.56	111.5	3.7	8.5
	15.0	43.7	0.56	93.0	6.0	13.9	57.2	0.56	100.1	6.0	13.9	70.6	0.56	107.1	5.9	13.6	84.3	0.56	114.3	5.8	13.4

060 Hydronic Cooling Capacity Tables

CFM	Flow	40°F EWT					WPD		45°F EWT					WPD		50°F EWT					WPD		55°F EWT					WPD	
	gpm	TC kBtuh	SC kBtuh	S/T Ratio	Power kW	LAT	PSI	FT	TC kBtuh	SC kBtuh	S/T Ratio	Power kW	LAT	PSI	FT	TC kBtuh	SC kBtuh	S/T Ratio	Power kW	LAT	PSI	FT	TC kBtuh	SC kBtuh	S/T Ratio	Power kW	LAT	PSI	FT
1525	7.5	49.2	35.7	0.73	0.38	58.3	2.0	4.7	40.9	31.8	0.78	0.38	60.7	2.0	4.7	32.6	28.0	0.86	0.38	63.0	2.0	4.7	27.2	24.7	0.91	0.38	65.0	1.9	4.4
	11.0	58.2	39.1	0.67	0.38	56.3	4.5	10.4	47.9	34.7	0.72	0.38	58.9	4.5	10.3	33.4	27.0	0.81	0.38	63.6	4.4	10.2	30.3	26.6	0.88	0.38	63.8	4.3	9.9
	15.0	67.3	42.4	0.63	0.38	54.2	7.0	16.1	55.0	37.6	0.68	0.38	57.2	6.9	15.9	42.6	32.8	0.77	0.38	60.1	6.8	15.7	33.3	28.5	0.86	0.38	62.7	6.7	15.5
1680	7.5	50.1	37.3	0.74	0.48	59.4	2.0	4.7	42.0	33.4	0.80	0.48	61.6	2.0	4.7	34.0	29.6	0.87	0.48	63.7	2.0	4.7	28.5	25.9	0.91	0.48	65.7	1.9	4.4
	11.0	59.9	41.3	0.69	0.48	57.2	4.5	10.4	49.5	36.7	0.74	0.48	59.8	4.5	10.3	38.3	31.4	0.82	0.48	62.7	4.4	10.2	31.5	28.2	0.89	0.48	64.5	4.3	9.9
	15.0	69.8	45.4	0.65	0.48	55.0	7.0	16.1	57.0	39.9	0.70	0.48	58.0	6.9	15.9	44.2	34.5	0.78	0.48	61.0	6.8	15.7	34.4	30.4	0.88	0.48	63.2	6.7	15.5
1760	7.5	51.0	38.9	0.76	0.56	59.5	2.0	4.7	43.4	35.2	0.81	0.56	61.5	2.0	4.7	35.8	31.5	0.88	0.56	63.4	2.0	4.7	29.8	27.1	0.91	0.56	65.8	1.9	4.4
	11.0	61.6	43.6	0.71	0.56	57.1	4.5	10.4	51.6	39.0	0.76	0.56	59.5	4.5	10.3	41.6	34.5	0.83	0.56	61.9	4.4	10.2	32.7	29.7	0.91	0.56	64.4	4.3	9.9
	15.0	72.3	48.3	0.67	0.56	54.6	7.0	16.1	59.8	42.8	0.72	0.56	57.5	6.9	15.9	47.4	37.4	0.79	0.56	60.3	6.8	15.7	35.6	32.3	0.91	0.56	63.0	6.7	15.5

Air Coil Nomenclature

1-2	3	4	5-7	8
GR	A	C	026	C

Model
GR – G Series Refrigerant Coil
GH – G Series Hydronic Coil

Configuration
A – “A” Coil

Type
C - Coil

Cabinet
C – Enclosed (Cased)
U – Uncased

Capacity
Refrigerant (DX) Models
026 MBTUH
036 MBTUH
048 MBTUH
060 MBTUH
Hydronic Models
060 MBTUH

NOTE: All refrigerant coils include TXV.

Rev.: 08 April 2013D

Refrigerant Coil Compatibility

Encased/Uncased Coil	Indoor Split Model (Single)	Indoor Split Model (Dual Capacity)	Outdoor Split Model (Dual Capacity)	Recommended Airflow (CFM)
GRAC026*	103*022	-		800
GRAC026*	-	103*026	104*026	925
GRAC026*	103*030	-	-	980
GRAC036*	103*036	-	-	1225
GRAC036*	-	103*038	104*038	1225
GRAC048*	103*042	-	-	1425
GRAC048*	103*048	-	-	1625
GRAC048*	-	103*049	104*049	1625
GRAC060*	103*060	-	-	1760
GRAC060*	-	103*064	104*064	1760
GRAC060*	103*070	-	-	1760
GRAC060*	-	103*072	104*072	1760

4/28/14

Coil Physical Data

Air Coil Model Number (Refrigerant)		GRAC026	GRAC036	GRAC048	GRAC060
Evaporator Coil	Air Coil Total Face Area, ft² [m²]	5.83 [0.54]			
	Tube outside diameter - in. [mm]	3/8 [9.52]			
	Number of rows	2		3	
	Fins per inch	12			
	Suction line connection - in. [mm] sweat	5/8 [15.87]		7/8 [22.22]	
	Liquid line connection - in. [mm] sweat	3/8 [9.52]			
Refrigerant		R-410A			
Nominal cooling capacity - tons [kW]		2.1 [7.59]	3 [10.55]	4 [14.06]	5 [17.58]
Condensate drain connection - (O.D.) in. [mm]		3/4 [19.05]			

Air Coil Model Number (Hydronic)		GHAC060
Hydronic Coil	Air Coil Total Face Area, ft² [m²]	6.94 [0.64]
	Tube outside diameter - in. [mm]	3/8 [9.52]
	Number of rows	3
	Fins per inch	13
	Water In connection - in. [mm] sweat	7/8 [22.22]
	Water Out connection - in. [mm] sweat	7/8 [22.22]
Nominal cooling capacity - tons [kW]		5 [17.58]
Condensate drain connection - (FPT) in. [mm]		3/4 [19.05]

NOTE: Water connection dimensions are O.D.

Dimensional Data

Hydronic Coil

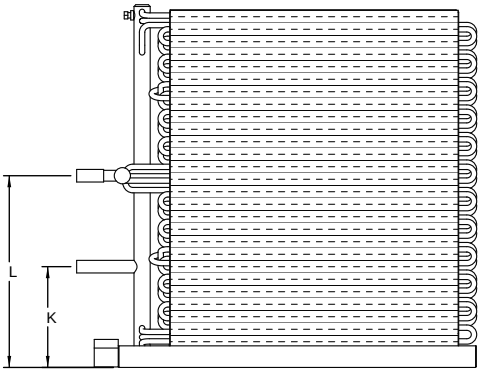

RIGHT SIDE

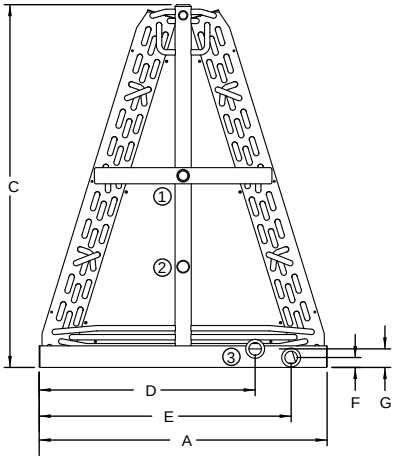

FRONT

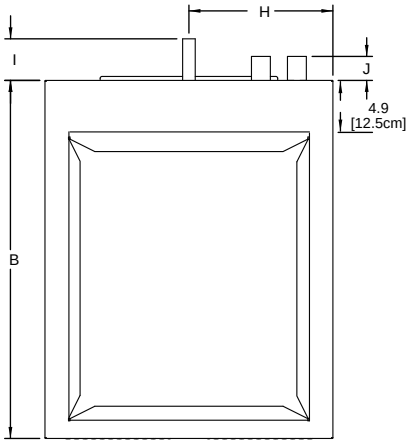

BOTTOM

Uncased Models		Overall Dimensions			Connections			Condensate Connections					Hydronic Connections			
		A Width	B Depth	C Height	1 Water Sweat	2 Water Sweat	3 Condensate FPT	D	E	F	G	H	I	J	K	L
060	in.	20.0	24.9	25.2	7/8	7/8	3/4	15.0	17.5	0.7	1.3	10.0	2.9	1.7	7.0	13.3
	cm.	50.8	63.3	63.5	2.2	2.2	1.9	38.1	44.5	1.8	3.3	25.4	7.4	4.3	17.8	33.8

Refrigerant Coil

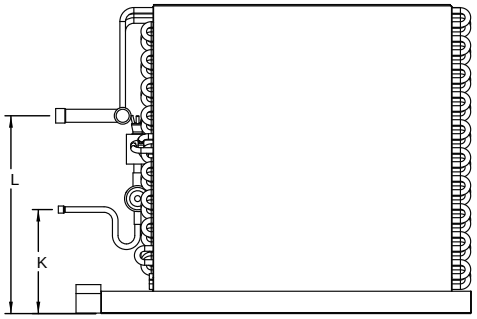

RIGHT SIDE

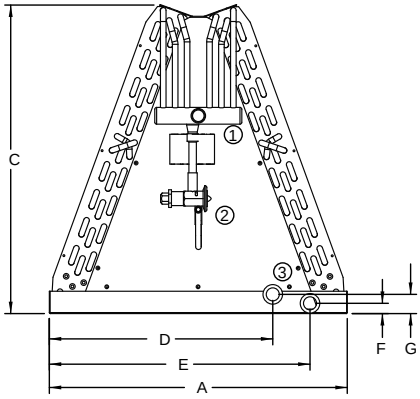

FRONT

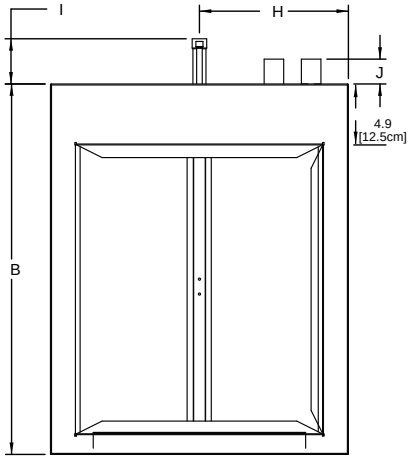

BOTTOM

Uncased Models		Overall Dimensions			Connections			Condensate Connections					Refrigerant Connections			
		A Width	B Depth	C Height	1 Suction Sweat	2 Liquid Sweat	3 Condensate Tube	D	E	F	G	H	I	J	K	L
DX 026-036	in.	20.0	24.9	20.7	5/8	3/8	3/4	15.0	17.5	0.7	1.3	10.0	3.0	1.7	7.0	13.3
	cm.	50.8	63.3	52.6	1.6	1.0	1.9	38.1	44.5	1.8	3.3	25.4	7.6	4.2	17.8	33.8
DX 048-060	in.	20.0	24.9	20.7	7/8	3/8	3/4	15.0	17.5	0.7	1.3	10.0	3.0	1.7	7.0	13.3
	cm.	50.8	63.3	52.6	2.2	1.0	1.9	38.1	44.5	1.8	3.3	25.4	7.6	4.2	17.8	33.8

NOTE: All refrigerant coils feature factory installed TXV. Water connection dimensions are O.D.

Dimensional Data - DX Cased Coils

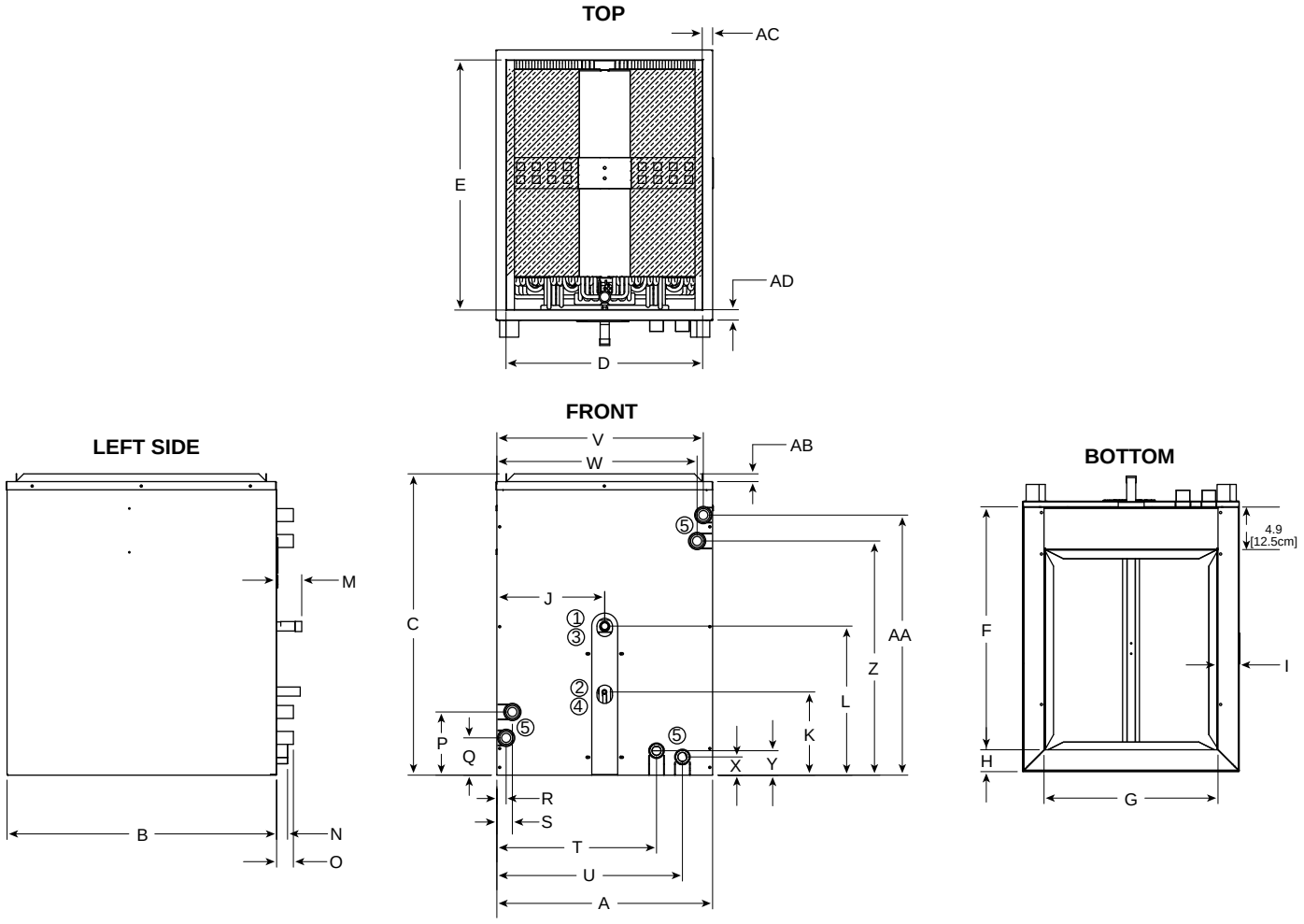

Encased Models		Overall Cabinet			Connections					Supply Connection		Inlet Connection			
		A Width	B Depth	C Height*	1 Suction Sweat	2 Liquid Sweat	3 Water Sweat	4 Water Sweat	5 Condensate Tube	D Supply Width	E Supply Depth	F	G	H	I
DX 026-036	in.	20.8	26.0	29.1	5/8	3/8	-	-	3/4	19.0	24.1	23.4	16.8	2.1	2.0
	cm.	52.8	66.0	73.9	1.6	1.0	-	-	1.9	48.3	61.2	59.4	42.7	5.3	5.1
DX 048-060	in.	20.8	26.0	29.1	7/8	3/8	-	-	3/4	19.0	24.1	23.4	16.8	2.1	2.0
	cm.	52.8	66.0	73.9	2.2	1.0	-	-	1.9	48.3	61.2	59.4	42.7	5.3	5.1

Encased Models		Refrigerant & Water Connections				Condensate Connections														Miscellaneous		
		J	K	L	M	N	O	P	Q	R	S	T	U	V	W	X	Y	Z	AA	AB	AC	AD
DX 026-036	in.	10.4	8.0	14.4	2.4	1.1	1.6	6.1	3.6	0.9	1.5	15.4	17.9	19.9	19.3	1.8	2.4	22.6	25.1	0.8	1.0	1.0
	cm.	26.4	20.3	36.6	6.1	2.8	4.1	15.5	9.1	2.3	3.8	39.1	45.5	50.6	49.1	4.5	6.0	57.4	63.7	1.9	2.5	2.5
DX 048-060	in.	10.4	8.0	14.4	2.4	1.1	1.6	6.1	3.6	0.9	1.5	15.4	17.9	19.9	19.3	1.8	2.4	22.6	25.1	0.8	1.0	1.0
	cm.	26.4	20.3	36.6	6.1	2.8	4.1	15.5	9.1	2.3	3.8	39.1	45.5	50.6	49.1	4.5	6.0	57.4	63.7	1.9	2.5	2.5

NOTE: All refrigerant coils feature factory installed TXV.

9/1/09

Dimensional Data - Hydronic Cased Coils

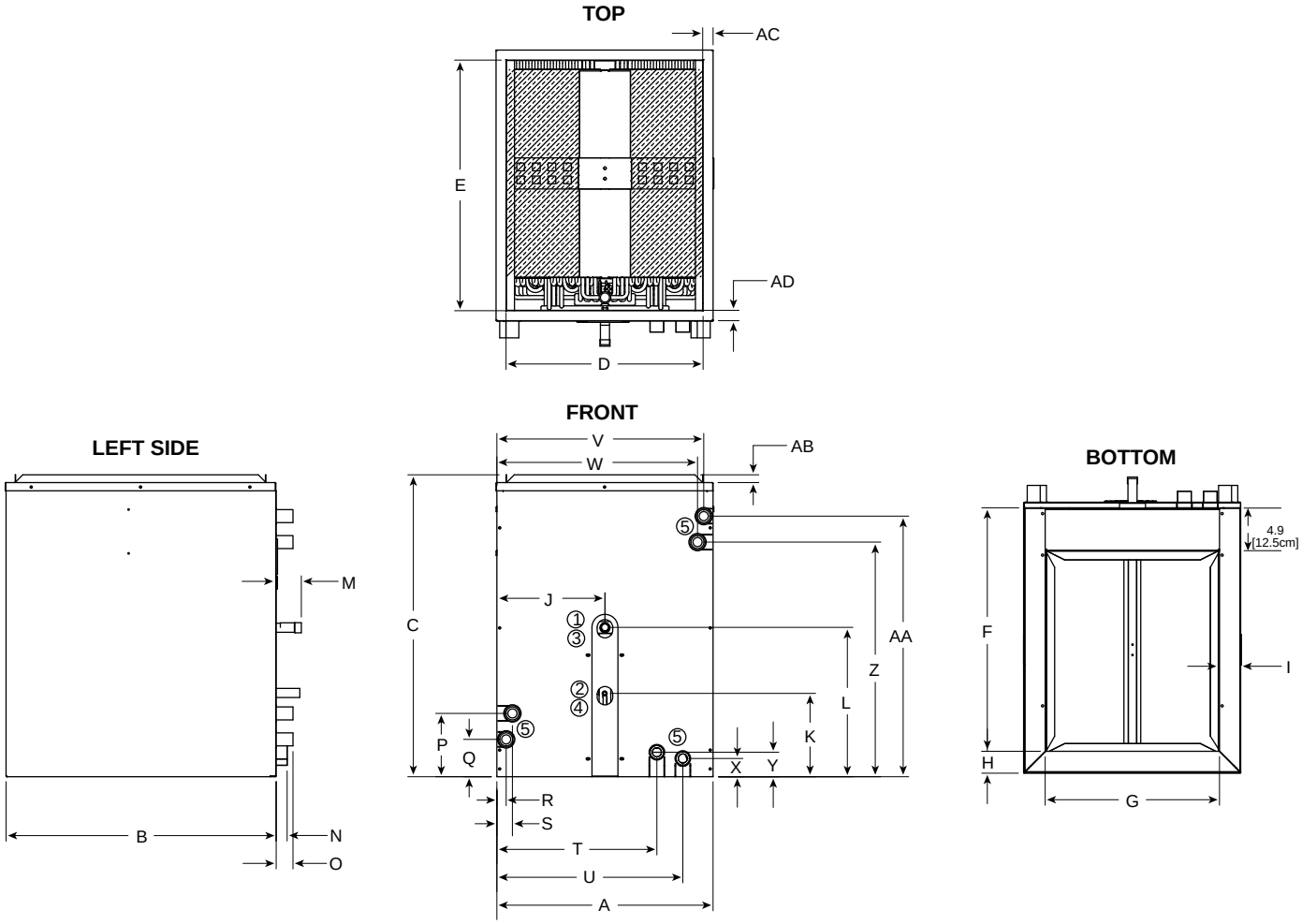

Encased Models		Overall Cabinet			Connections					Supply Connection		Inlet Connection			
		A Width	B Depth	C Height*	1 Suction Sweat	2 Liquid Sweat	3 Water Sweat	4 Water Sweat	5 Condensate FPT	D Supply Width	E Supply Depth	F	G	H	I
Hydronic 060	in.	20.8	26.0	29.1	-	-	7/8	7/8	3/4	19.0	24.1	23.4	16.8	2.1	2.0
	cm.	52.8	66.0	73.9	-	-	2.2	2.2	1.9	48.3	61.2	59.4	42.7	5.3	5.1

Encased Models		Refrigerant & Water Connections				Condensate Connections														Miscellaneous		
		J	K	L	M	N	O	P	Q	R	S	T	U	V	W	X	Y	Z	AA	AB	AC	AD
Hydronic 060	in.	10.4	8.0	14.4	2.4	1.1	1.6	6.1	3.6	0.9	1.5	15.4	17.9	19.9	19.3	1.8	2.4	22.6	25.1	0.8	1.0	1.0
	cm.	26.4	20.3	36.6	6.1	2.8	4.1	15.5	9.1	2.3	3.8	39.1	45.5	50.6	49.1	4.5	6.0	57.4	63.7	1.9	2.5	2.5

Engineering Guide Specifications

General

The air handler shall provide vertical upflow, downflow, or horizontal configurations in one package. Units shall be listed by a nationally recognized safety-testing laboratory or agency, such as Underwriter's Laboratory (UL) or Environmental Testing Laboratories (Intertek-ETL). The air handler units shall be designed and ARI performance listed to operate with the G Series geothermal split condensing units. Each unit shall be pallet mounted and shipped using dense cardboard corners/top and stretch wrap for easy shipping damage inspection.

Casing and Cabinet

The cabinet shall be fabricated from heavy-gauge galvanized steel and polyester powder coat paint to withstand 1000 hours of salt spray testing. The interior shall be insulated with 1/2˝-thick, multi-density, cleanable aluminum foil coated glass fiber with edges sealed or tucked under flanges to prevent the introduction of glass fibers into the discharge air. One large blower compartment access panel shall be provided and shall be removable with supply and return ductwork in place. The internal components layout shall provide for major service with the unit in-place for restricted access installations. The blower assembly access shall be slide-out serviceable via a 'works-in-a-drawer' design. The cabinet shall be convertible to horizontal or downflow applications by reconfiguring the cabinet using only a nut driver. The unit shall be 'zero clearance' approved on any of its surfaces. The cabinet shall be divided into two cubes to facilitate easy transport up attic ladders when needed. Standard-size MERV 3 1˝ filters shall be provided with each unit.

Refrigeration Circuit

All units shall provide a fin tube air-to-refrigerant heat exchanger of the "A" coil design. The finned tube e-coated coil shall be sized for low-face velocity and constructed of lanced aluminum fins bonded to rifled copper tubes in a staggered pattern. The coil shall include an integral corrosion resistant e-coated galvanized steel drain pan.

The thermal expansion valve shall be factory installed and provide proper superheat over the entire liquid temperature range with minimal "hunting." The valve shall operate in the cooling mode through the use of an internal check valve.

Blower Motor and Assembly

The blower shall be an oversized direct drive centrifugal type with a dynamically balanced wheel. The housing and wheel shall be designed for quiet low outlet velocity operation and of galvanized or galvalume steel construction. Tight blower housing geometry shall not be permitted. The blower housing shall be removable from the unit without disconnecting the supply air ductwork for servicing of the blower motor through a 'works-in-a-drawer' design. The high efficiency blower motor shall be a variable speed ECM type. The blower motor shall be isolated from the housing by rubber grommets. The motor shall be permanently lubricated ball bearings and have thermal overload protection.

Electrical

A solid state electronic control module shall be provided for the control of the blower and each stage of electric heat. Single or dual circuit line voltage terminal blocks shall be provided for the air handler power supply. Fuse protection shall be provided for the 75 VA control transformer. Units shall have knockouts for entrance of the low and line voltage wiring. The blower motor shall incorporate a harness plug-connection for easy removal. An integral circuit breaker shall be provided on all units employing 15 or 20 kW electric heat. The control shall maintain the blower operation 30 seconds after the compressor or electric heat have shut off to improve efficiency.

Piping

Refrigerant connections shall be made using sweat copper joints. The condensate connections shall be a 3/4˝ O.D. tube on DX coils, and 3/4" FPT on hydronic models.

Revision Guide

Pages:	Description:	Date:	By:
All	Updated Dimensional Data for New Vertical Condensate Drain	02 May 2014	DS
All	Updated Nomenclature For New ECM Motor	20 Feb 2013	DS
15-16	Added Additional Dimension on Return Side Opening on Hydronic & DX Coils	20 Feb 2013	DS
19	Added Revision Guide	20 Feb 2013	DS
15-18	Updated Drain Pan	20 May 2014	DS/MA

Product:	**Aston Series Air Handler**
Type:	Hydronic or R-410A
Size:	2 - 6 Tons
Document Type:	Specification Catalog
Part Number:	SC1008HG
Release Date:	05/14

©2014 The manufacturer has a policy of continual product research and development and reserves the right to change design and specifications without notice.